Panasonic®

Operating Instructions

Cordless Phone

Model No. **KX-TGD830**
KX-TGD832
KX-TGD833

Model shown is KX-TGD830.

Before initial use, see "Getting Started" on page 10.

Thank you for purchasing a Panasonic product.
Please read these operating instructions before using the unit and save them for future reference.

Consulte "Guía Rápida Española", página 61.

For assistance, visit our Web site: **http://shop.panasonic.com/support** for customers in the U.S.A.

Please register your product: http://shop.panasonic.com/support

Table of Contents

Introduction
Model composition 3
Accessory information 3
Graphical symbols for use on equipment and their descriptions 5

Important Information
For your safety 6
Important safety instructions 7
For best performance 8
Other information 8
Specifications 9

Getting Started
Setting up 10
Controls 12
Display icons 13
Language settings 14
Date and time 14
Recording your greeting message 14
Other settings 15

Making/Answering Calls
Making calls 16
Answering calls 16
Useful features during a call 17
Intercom 19

Answer by Voice Command
Answer by voice command 20

Call Block
Call block 21
Storing unwanted callers 21

Enhanced Call Block
Automated call block 23
Telemarketing call block 25
One ring scam alert 25

Phonebook
Phonebook 27
Speed dial 29

Programming
Menu list 30
Alarm 36
Silent mode 36
Baby monitor 37
Other programming 39
Registering a unit 39

Caller ID Service
Using Caller ID service 40
Caller list 40

Answering System
Answering system 42
Turning the answering system on/off 42
Greeting message 42
Listening to messages 43
Advanced new message alerting features 44
Remote operation 45
Answering system settings 47

Useful Information
Voicemail service 48
Wall mounting 49
Error messages 52
Troubleshooting 53
FCC and other information 58

Guía Rápida Española
Guía Rápida Española 61

Appendix
Customer services 66
Limited Warranty (ONLY FOR U.S.A.) 67

Index
Index.....69

TGD83x(en)_1216_ver023.pdf 2 2020/12/16 14:04:14

Model composition

Series	Model No.	Base unit	Handset	
		Part No.	Part No.	Quantity
KX-TGD830 series	KX-TGD830	KX-TGD830	KX-TGDA83	1
	KX-TGD832	KX-TGD830	KX-TGDA83	2
	KX-TGD833	KX-TGD830	KX-TGDA83	3

Accessory information

Supplied accessories

No.	Accessory item/ Part number	Quantity		
		KX-TGD830	KX-TGD832	KX-TGD833
①	AC adaptor*1	1	1	1
②	Telephone line cord*2	1	1	1
③	Wall mounting adaptor*3	1	1	1
④	Rechargeable batteries*4	2	4	6
⑤	Handset cover*5, *6	1	2	3
⑥	Charger*7	–	1	2

*1 PNLV226-0P or PNLV226-0R or PNLV226-0X
*2 PNJA1186Z (Black cord), PNJA1193Z (Transparent cord)
*3 PNKL1044Y2 (Black), PNKL1044Y1 (White)
*4 See page 4 for replacement battery information.
*5 The handset cover comes attached to the handset.
*6 PNYNTGDA83MR (Black), PNYNTGDA83WR (White)
*7 PNLC1077ZB (Black), PNLC1077ZW (White)

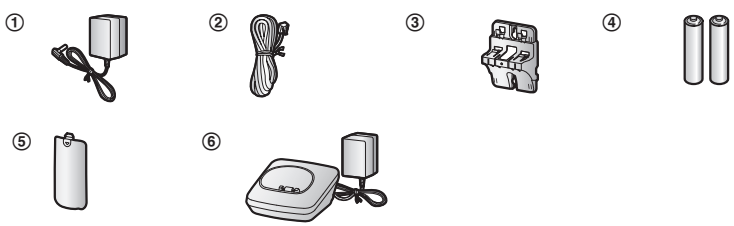

TGD83x(en)_1216_ver023.pdf 3 2020/12/16 14:04:14

Additional/replacement accessories

Please contact your nearest Panasonic dealer for sales information (page 66).

Accessory item	Model number/Specifications
Rechargeable batteries	HHR-4DPA*1 ● To order, please visit http://shop.panasonic.com/support
	Battery type: – Nickel metal hydride (Ni-MH) – 2 x AAA (R03) size for each handset
Range extender	KX-TGA407*2
Key detector	KX-TGA20*3

*1 Replacement batteries may have a different capacity from that of the supplied batteries.
*2 By installing this unit, you can extend the range of your phone system to include areas where reception was previously not available. This product can be purchased online. Please visit our Web site: http://shop.panasonic.com/support
*3 By registering the key detector (4 max.) to a Panasonic Digital Cordless Phone and attaching it to an easy-to-lose item in advance, you can locate and find the mislaid item to which the key detector is attached. Please visit our Web site: http://www.panasonic.com/tga20

Other information

- Design and specifications are subject to change without notice.
- The illustrations in these instructions may vary slightly from the actual product.

Expanding your phone system

Handset (optional): KX-TGDA83/KX-TGDA86	
You can expand your phone system by registering optional handsets (6 max.) to a single base unit. ● Optional handsets may be a different color from that of the supplied handsets. ● Optional handsets (KX-TGDA86) have a different key print from that of the supplied handsets. ● To order, please visit http://shop.panasonic.com/support	

TGD83x(en)_1216_ver023.pdf 4 2020/12/16 14:04:14

Graphical symbols for use on equipment and their descriptions

Symbol	Explanation	Symbol	Explanation
~	Alternating current (A.C.)	⧈	Class II equipment (equipment in which protection against electric shock relies on Double Insulation or Reinforced Insulation)
⎓	Direct current (D.C.)	|	“ON” (power)
⏚	Protective earth	○	“OFF” (power)
⏚	Protective bonding earth	⏻	Stand-by (power)
⚠	Caution, risk caused by visible radiation	⏻	“ON”/“OFF” (power; push-push)
⌂	For indoor use only	⚠	Caution, risk of electric shock

TGD83x(en)_1216_ver023.pdf 5 2020/12/16 14:04:14

For your safety

To prevent severe injury and loss of life/ property, read this section carefully before using the product to ensure proper and safe operation of your product.

⚠ WARNING

Power connection

- Use only the power source marked on the product.
- Do not overload power outlets and extension cords. This can result in the risk of fire or electric shock.
- Completely insert the AC adaptor/power plug into the power outlet. Failure to do so may cause electric shock and/or excessive heat resulting in a fire.
- Regularly remove any dust, etc. from the AC adaptor/power plug by pulling it from the power outlet, then wiping with a dry cloth. Accumulated dust may cause an insulation defect from moisture, etc. resulting in a fire.
- Unplug the product from power outlets if it emits smoke, an abnormal smell, or makes an unusual noise. These conditions can cause fire or electric shock. Confirm that smoke has stopped emitting and contact us at http://shop.panasonic.com/support
- Unplug from power outlets and never touch the inside of the product if its casing has been broken open.
- Never touch the plug with wet hands. Danger of electric shock exists.

Installation

- To prevent the risk of fire or electrical shock, do not expose the product to rain or any type of moisture.
- Do not place or use this product near automatically controlled devices such as automatic doors and fire alarms. Radio waves emitted from this product may cause such devices to malfunction resulting in an accident.
- Do not allow the AC adaptor or telephone line cord to be excessively pulled, bent or placed under heavy objects.
- Do not place the handset on the base unit when battery cover is removed.

Operating safeguards

- Unplug the product from power outlets before cleaning. Do not use liquid or aerosol cleaners.
- Do not disassemble the product.
- Do not spill liquids (detergents, cleansers, etc.) onto the telephone line cord plug, or allow it to become wet at all. This may cause a fire. If the telephone line cord plug becomes wet, immediately pull it from the telephone wall jack, and do not use.

Medical

- Consult the manufacturer of any personal medical devices, such as pacemakers or hearing aids, to determine if they are adequately shielded from external RF (radio frequency) energy. (The product operates in the frequency range of 1.92 GHz to 1.93 GHz, and the RF transmission power is 115 mW (max.).)
- Do not use the product in health care facilities if any regulations posted in the area instruct you not to do so. Hospitals or health care facilities may be using equipment that could be sensitive to external RF energy.

⚠ CAUTION

Installation and location

- Never install telephone wiring during an electrical storm.
- Never install telephone line jacks in wet locations unless the jack is specifically designed for wet locations.
- Never touch uninsulated telephone wires or terminals unless the telephone line has been disconnected at the network interface.
- Use caution when installing or modifying telephone lines.
- The AC adaptor is used as the main disconnect device. Ensure that the AC

TGD83x(en)_1216_ver023.pdf 6 2020/12/16 14:04:14

outlet is installed near the product and is easily accessible.
- The product is only use for mounting at heights ≤ 2 m.

  Note:
  - This height is not guaranteed for product reliability.
  - To prevent serious injuries due to the product unexpectedly falling, the product must be installed at a height of 1.5 m or lower.
- This product is unable to make calls when:
  – the handset batteries need recharging or have failed.
  – there is a power failure.

Battery

- We recommend using the batteries noted on page 4. **USE ONLY rechargeable Ni-MH batteries AAA (R03) size.**
- Do not mix old and new batteries.
- Do not open or mutilate the batteries. Released electrolyte from the batteries is corrosive and may cause burns or injury to the eyes or skin. The electrolyte is toxic and may be harmful if swallowed.
- Exercise care when handling the batteries. Do not allow conductive materials such as rings, bracelets, or keys to touch the batteries, otherwise a short circuit may cause the batteries and/or the conductive material to overheat and cause burns.
- Charge the batteries provided with or identified for use with this product only, in accordance with the instructions and limitations specified in this manual.
- Only use a compatible base unit (or charger) to charge the batteries. Do not tamper with the base unit (or charger). Failure to follow these instructions may cause the batteries to swell or explode.
- Avoid the use in the following conditions
  – High or low extreme temperatures during use, storage or transportation.
  – Replacement of a battery with an incorrect type that can defeat a safeguard.
  – Disposal of a battery into fire or a hot oven, or mechanically crushing or cutting of a battery, that can result in an explosion.
  – Extremely high temperature and/or extremely low air pressure that can result in an explosion or the leakage of flammable liquid or gas.

Attention:

A nickel metal hydride battery that is recyclable powers the product you have purchased.
Please call 1-800-8-BATTERY (1-800-822-8837) for information on how to recycle this battery.

Important safety instructions

When using your product, basic safety precautions should always be followed to reduce the risk of fire, electric shock, and injury to persons, including the following:
1. Do not use this product near water for example, near a bathtub, washbowl, kitchen sink, or laundry tub, in a wet basement or near a swimming pool.
2. Avoid using a telephone (other than a cordless type) during an electrical storm. There may be a remote risk of electric shock from lightning.
3. Do not use the telephone to report a gas leak in the vicinity of the leak.
4. Use only the power cord and batteries indicated in this manual. Do not dispose of batteries in a fire. They may explode. Check with local codes for possible special disposal instructions.

SAVE THESE INSTRUCTIONS

TGD83x(en)_1216_ver023.pdf 7 2020/12/16 14:04:14

For best performance

Base unit location/avoiding noise

The base unit and other compatible Panasonic units use radio waves to communicate with each other.

- For maximum coverage and noise-free communications, place your base unit:
  - at a convenient, high, and central location with no obstructions between the handset and base unit in an indoor environment.
  - away from electronic appliances such as TVs, radios, personal computers, wireless devices, or other phones.
  - facing away from radio frequency transmitters, such as external antennas of mobile phone cell stations. (Avoid putting the base unit on a bay window or near a window.)
- Coverage and voice quality depends on the local environmental conditions.
- If the reception for a base unit location is not satisfactory, move the base unit to another location for better reception.

Environment

- Keep the product away from electrical noise generating devices, such as fluorescent lamps and motors.
- The product should be kept free from excessive smoke, dust, high temperature, and vibration.
- The product should not be exposed to direct sunlight.
- Do not place heavy objects on top of the product.
- When you leave the product unused for a long period of time, unplug the product from the power outlet.
- The product should be kept away from heat sources such as heating devices, cooking appliances, etc. It should not be placed in rooms where the temperature is less than 0 °C (32 °F) or greater than 40 °C (104 °F). Damp basements should also be avoided.
- The maximum calling distance may be shortened when the product is used in the following places: Near obstacles such as hills, tunnels, underground, near metal objects such as wire fences, etc.
- Operating the product near electrical appliances may cause interference. Move away from the electrical appliances.

Routine care

- **Wipe the outer surface of the product with a soft moist cloth.**
- Do not use benzine, thinner, or any abrasive powder.

Other information

- The applied nameplate is located at the bottom or rear of the product.

⚠ **CAUTION:** Risk of explosion if battery is replaced by an incorrect type. Dispose of used batteries according to the instructions.

Notice for product disposal, transfer, or return

- This product can store your private/confidential information. To protect your privacy/confidentiality, we recommend that you erase information such as phonebook or caller list entries from the memory before you dispose of, transfer, or return the product.

TGD83x(en)_1216_ver023.pdf 8 2020/12/16 14:04:14

Notice

- This product is designed for use in the United States of America. Sale or use of this product in other countries may violate local laws.
- Cet appareil est conçu pour être utilisé aux États-Unis d'Amérique. La vente ou l'emploi de cet appareil dans certains autres pays peut constituer une infraction à la législation locale.
- Este producto está diseñado para usarse en los Estados Unidos de América.
  La venta o el empleo de este producto en ciertos países puede constituir violación de la legislación local.
- 本產品專為美國使用而設。若在其他國家銷售或使用，可能會違反當地法例。
- この製品は、日本国外での使用を目的として設計されており、日本国内での使用は法律違反となります。従って、当社では日本国内においては 原則として修理などのサービスは致しかねます。

Specifications

- **Frequency range:**
  1.92 GHz to 1.93 GHz
- **RF transmission power:**
  115 mW (max.)
- **Power source:**
  120 V AC, 60 Hz
- **Power consumption:**
  Base unit:
  Standby: 1.0 W
  Maximum: 4.3 W
  Charger:
  Standby: 0.1 W
  Maximum: 1.8 W
- **Operating conditions:**
  0 °C – 40 °C (32 °F – 104 °F), 20 % – 80 % relative air humidity (dry)

TGD83x(en)_1216_ver023.pdf 9 2020/12/16 14:04:14

Setting up

Connections

■ **Base unit**

① Connect the AC adaptor to the unit by pressing the plug firmly.
② Connect the AC adaptor to the power outlet.
③ Connect the telephone line cord to the unit, then to the single-line telephone jack (RJ11C) until you hear a click.
④ A DSL/ADSL filter (not supplied) is required if you have a DSL/ADSL service.

Note:

- Use only the supplied Panasonic AC adaptor PNLV226.

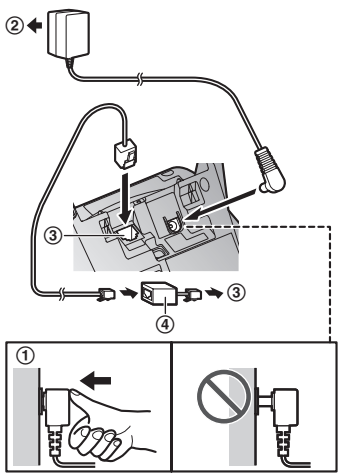

■ **Charger**

① Connect the AC adaptor to the power outlet.

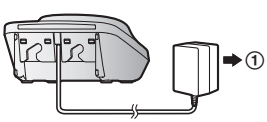

Battery installation

- USE ONLY rechargeable Ni-MH batteries AAA (R03) size (Ⓐ).
- Do NOT use alkaline/manganese/Ni-Cd batteries.
- Confirm correct polarities (⊕, ⊖).

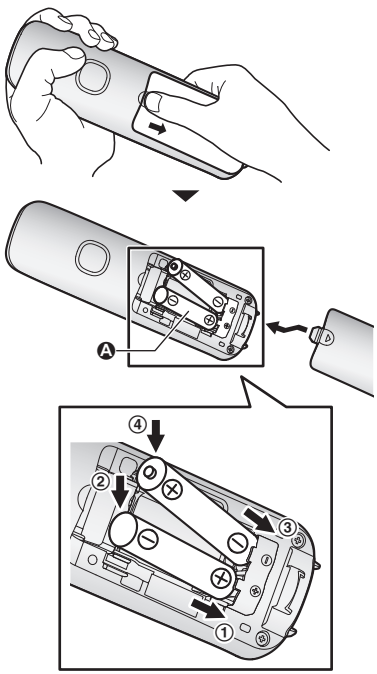

- Follow the directions on the display to set up the unit.

TGD83x(en)_1216_ver023.pdf 10 2020/12/16 14:04:15

Removing the battery

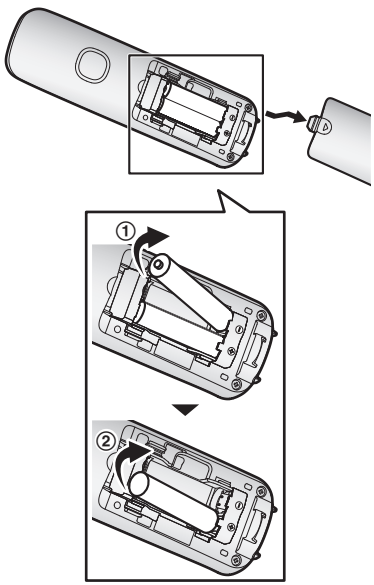

Battery charging

Charge for about 7 hours.

- Confirm "**Charging**" is displayed (Ⓐ).
- When the batteries are fully charged, "**Fully charged**" is displayed.

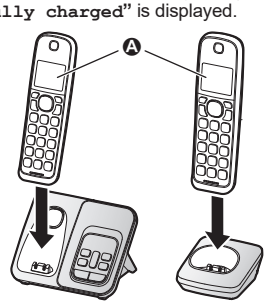

Note when setting up

Note for connections

- The AC adaptor must remain connected at all times. (It is normal for the adaptor to feel warm during use.)
- The AC adaptor should be connected to a vertically oriented or floor-mounted AC outlet. Do not connect the AC adaptor to a horizontally oriented AC outlet that faces the floor, such as an AC outlet installed on a ceiling or under a table, as the weight of the adaptor may cause it to become disconnected.

Power failure

- The unit cannot be used to make or receive calls during a power failure. We recommend connecting a corded-type telephone that does not use an AC adaptor to your telephone line.

Note for battery installation

- Use the supplied rechargeable batteries. For replacement, we recommend using the Panasonic rechargeable batteries noted on page 4, 7.

Note for battery charging

- It is normal for the handset to feel warm during charging.
- Clean the charge contacts of the handset, base unit, and charger with a soft and dry cloth once a month. Before cleaning the unit, disconnect from power outlets and any telephone line cords. Clean more often if the unit is exposed to grease, dust, or high humidity.

TGD83x(en)_1216_ver023.pdf 11 2020/12/16 14:04:15

Battery level

Icon	Battery level
	High
	Medium
	Low
/	Needs charging.
	Empty

Note:

- At the end of each call, the unit displays a large icon for a few moments to indicate the battery level.
- You can set the unit to play a voice announcement when the battery is low or needs charging (page 15).

Ni-MH battery performance (supplied batteries)

Operation	Operating time
In continuous use	10 hours max.*1
Not in use (standby)	5 days max.*1

*1 If eco mode is on.

Note:

- Actual battery performance depends on usage and ambient environment.

Intelligent eco mode

This feature automatically reduces handset power consumption by suppressing handset transmission power when the handset is close to the base unit.

- When this feature is activated, ECO is displayed. However, when answer by voice command is turned on (page 20), ECO is not displayed even though this feature is activated.

Controls

Handset

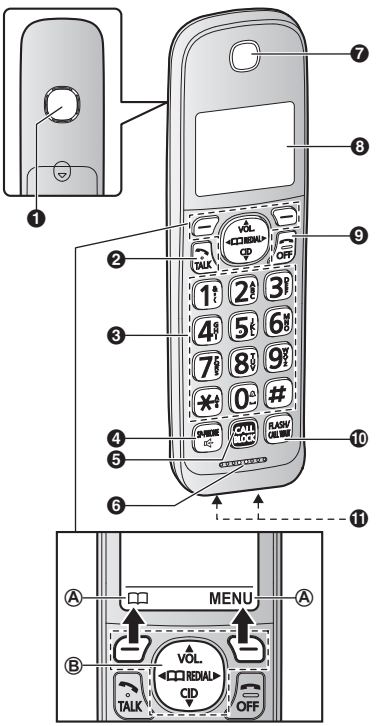

❶ **Speaker**
❷ **【 】(TALK)**
❸ **Dial keypad**
[*]: Temporary tone dialing
[0]: ( ) Ringer off
❹ **【 】(SP-PHONE: Speakerphone)**
❺ **【CALL BLOCK】**
❻ **Microphone**
❼ **Receiver**
❽ **Display**
❾ **【OFF】( )**

TGD83x(en)_1216_ver023.pdf 12 2020/12/16 14:04:15

⑩ 【FLASH】【CALL WAIT】
⑪ Charge contacts

■ **Control type**

Ⓐ **Soft keys**

By pressing a soft key, you can select the feature shown directly above it on the display.

Ⓑ **Navigator key**

– 【▲】, 【▼】, 【◄】, or 【►】: Scroll through various lists and items.
– VOL. (Volume: 【▲】 or 【▼】): Adjust the receiver or speaker volume while talking.
– 【◄】 📖: View the phonebook entry.
– 【►】 REDIAL: View the redial list.
– 【▼】 CID (Caller ID): View the caller list.

Base unit

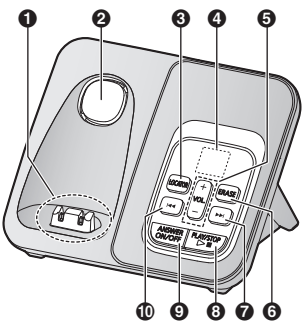

❶ **Charge contacts**
❷ **Speaker**
❸ 【LOCATOR】
- You can locate a misplaced handset by pressing 【LOCATOR】.

❹ **Message counter**
❺ 【+】/【−】 (VOL.: Volume up/down)
❻ 【ERASE】
❼ 【►►I】 (Skip)
❽ 【►■】 (PLAY/STOP)
Message indicator (►)
❾ 【ANSWER ON/OFF】
❿ 【I◄◄】 (Repeat)

Display icons

Handset display items

Item	Meaning
	Within base unit range
	Out of base unit range
	The line is in use. ● When flashing slowly: The call is on hold. ● When flashing rapidly: An incoming call is now being received.
ECO	Eco mode is on. (page 12)
NR	Noise reduction is set. (page 17)
EQ	Equalizer is set. (page 18)
	Speakerphone is on. (page 16)
	Ringer volume is off. (page 16, 32)
Zzz	Silent mode is on. (page 37)
PRIV.	Call sharing mode is off. (page 34)
	Alarm is on. (page 36)
1	Handset number
	Battery level
	Answer by voice command is on. (page 20)
#	Blocked call (page 21)
	Automated call block is set to "Block". (page 23)
	Blocked automated call (page 41)
	Scam call (page 41)
	Baby monitor is activated. The name/number displayed next to the icon indicates the monitoring unit. (page 37)

TGD83x(en)_1216_ver023.pdf 13 2020/12/16 14:04:15

Item	Meaning
In use	Answering system is being used by another unit.
Line in use	Someone is using the line.

Base unit display item

Item	Meaning
go	"Greeting only" is selected. Caller messages are not recorded. (page 47)

Language settings

Display language

1 [MENU]#110
2 [▲▼]: Select the desired setting. → [SAVE] → [OFF]

Note:

- The language selected will also be used for the low battery alert announcement (page 15).

Voice announcement language

You can select the language used for the following features.
– Answering system guidance
– Automated call block guidance
– Telemarketing call block guidance
– Talking Caller ID
– Answer by voice command announcement
– 2-way recording announcement

1 [MENU]#112
2 [▲▼]: Select the desired setting. → [SAVE] → [OFF]

Date and time

1 [MENU]#101
2 Enter the current month, date, and year by selecting 2 digits for each.
Example: July 12, 2021
07 12 21
3 [OK]
4 Enter the current hour and minute (12-hour clock format) by selecting 2 digits for each.
Example: 9:30
09 30
5 [*]: Select "AM" or "PM".
6 [SAVE] → [OFF]

Note:

- When English is selected as the display language, 12-hour clock format is used. When Spanish is selected, 24-hour clock format is used.

Recording your greeting message

You can record your own greeting message instead of using a pre-recorded greeting message. See page 42 for details.

1 [MENU]#302
2 [▲▼]: "Yes" → [SELECT]
3 Record a greeting message. → [STOP] → [OFF]

TGD83x(en)_1216_ver023.pdf 14 2020/12/16 14:04:15

Other settings

Dialing mode

If you cannot make calls, change this setting according to your telephone line service. The default setting is "**Tone**".
"**Tone**": For tone dial service.
"**Pulse**": For rotary/pulse dial service.

1 【MENU】#120
2 【▲▼】: Select the desired setting. → 【SAVE】 → 【OFF】

Low battery alert

This feature plays a voice announcement when the handset battery is low or needs charging.
When this feature is turned on, the unit notifies you as follows.

■ **When you end a call:**
– The unit plays a voice announcement when the battery is low or needs charging.

■ **When the handset is in standby mode:**
– If the battery is low or needs charging, the unit plays a voice announcement at the selected interval up to 3 times.

Note for handset:
- At the end of each call, the unit displays a large icon for a few moments to indicate the battery level.

Setting low battery alert

To turn this feature on, select the desired announcement interval, or select "**Off**" to turn this feature off. The default setting is "**Every hour**".

1 【MENU】#176
2 【▲▼】: Select the desired setting. → 【SAVE】 → 【OFF】

TGD83x(en)_1216_ver023.pdf 15 2020/12/16 14:04:15

Making calls

1 Lift the handset and then dial the phone number.
- To correct a digit, press **【CLEAR】**.

2 Press **【 】** to make the call.
- To make the call using the speakerphone, press **【 】**.

3 When you finish talking, press **【OFF】** or place the handset on the base unit or charger.

Note:
- To switch to the speaker, press **【 】**. To switch back to the receiver, press **【 】**/**【 】**.
- In step 1, you can store the dialed phone number to the phonebook by pressing and holding **【◄】** 📖 for a few seconds.

Making a call using the redial list

The last 5 phone numbers dialed are stored in the redial list (48 digits max. each).

1 **【►】** REDIAL

2 **【▲▼】**: Select the desired entry.

3 Press **【 】** or **【 】**.

Erasing a number in the redial list

1 **【►】** REDIAL

2 **【▲▼】**: Select the desired entry. → **【ERASE】**

3 **【▲▼】**: **"Yes"** → **【SELECT】** → **【OFF】**

Adjusting the receiver or speaker volume

Press **【▲】** or **【▼】** repeatedly while talking.

Note for handset:
- If the receiver volume is set to level 5 (max.), it will be changed to level 4 in the next call.

Pause (for PBX/long distance service users)

A pause is sometimes required when making calls using a PBX or long distance service. When storing a calling card access number and/or PIN in the phonebook, a pause is also needed (page 28).

Example: If you need to dial the line access number "9" when making outside calls with a PBX:

1 9 → **【▲】** (Pause)

2 Dial the phone number. → **【 】**

Note:
- A 3.5 second pause is inserted each time **【▲】** (Pause) is pressed.

Answering calls

1 Lift the handset and then press **【 】** or **【 】** when the unit rings.

2 When you finish talking, press **【OFF】** or place the handset on the base unit or charger.

Any key answer: You can answer the call by pressing any dial key (except 0 key).
Auto talk: You can answer calls simply by lifting the handset (page 34).
Temporary handset ringer off: You can turn the ringer off temporarily by pressing **【 】** (left soft key).

Adjusting the ringer volume

Handset

Press **【▲】** or **【▼】** repeatedly to select the desired volume while ringing.
- To turn the ringer off, press **【▼】** repeatedly.

Base unit

Press **【+】** or **【−】** repeatedly to select the desired volume.
- To turn the ringer off, press and hold **【−】** until the unit beeps.

TGD83x(en)_1216_ver023.pdf 16 2020/12/16 14:04:16

Note for handset:
- To change the ringer volume and ringer tone for an outside call, see page page 32.

One-touch ringer off for the handset

Press and hold 0 (🔕) until the unit beeps to turn the ringer off. While the ringer is turned off, the handset will not ring for calls.
- You can turn the ringer on again by pressing and holding 0 (🔕) until the unit beeps.

Useful features during a call

Hold

1 Press 【MENU】 during an outside call.
2 【▲▼】: "Hold" → 【SELECT】
3 To release hold, press 【📞】.
   - Another handset user can take the call by pressing 【📞】.

Note:
- After holding for 10 minutes, the call is disconnected.

Mute

1 Press 【MUTE】 during a call.
2 To return to the call, press 【MUTE】.

Note:
- 【MUTE】 is a soft key visible on the display during a call.

Flash

【FLASH】 allows you to use the special features of your host PBX such as transferring an extension call, or accessing optional telephone services.

Note:
- To change the flash time, see page 34.

For call waiting or Call Waiting Caller ID service users

To use call waiting or Call Waiting Caller ID, you must first subscribe with your phone service provider.
This feature allows you to receive calls while you are already talking on the phone. If you receive a call while on the phone, you will hear a call waiting tone.
If you subscribe to both Caller ID and Call Waiting with Caller ID services, the 2nd caller's information is displayed on the unit that is in use after you hear the call waiting tone.

1 Press 【CALL WAIT】 to answer the 2nd call.
2 To switch between calls, press 【CALL WAIT】.

Note:
- Please contact your phone service provider for details and availability of this service in your area.

Temporary tone dialing (for rotary/pulse service users)

Press * before entering access numbers which require tone dialing.

Handset noise reduction

This feature allows you to hear the voice of the person you are talking to more clearly, by reducing the surrounding noise coming from the other party's telephone.

1 Press 【MENU】 while talking.
2 【▲▼】: "Noise reduction on" or "Noise reduction off" → 【SELECT】

Note:
- Depending on the environment where this handset is being used, this feature may not be effective.
- This feature is not available while using the speakerphone.

TGD83x(en)_1216_ver023.pdf 17 2020/12/16 14:04:16

Handset equalizer

This feature clarifies the voice of the person you are talking to, producing a more natural-sounding voice that is easier to hear and understand.

1 Press 【MENU】 while talking.

2 【▲▼】: "Equalizer" → 【SELECT】

3 【▲▼】: Select the desired setting.

4 Press 【OK】 to exit.

Note:

- Depending on the condition and quality of your telephone line, this feature may emphasize existing line noise. If it becomes difficult to hear, select another setting.
- This feature is not available while using the speakerphone.
- When both the "Equalizer" setting and noise reduction are activated, NR is shown on the display.

Recording a telephone conversation (2-way recording)

This unit can record a telephone conversations during outside calls.

1 Press 【MENU】 during a outside call.

2 【▲▼】: "2 way recording" → 【SELECT】
- The total recordable time is displayed.
- The unit announces to both parties that the recording will start.
- The unit starts recording.

3 To stop recording, press 【MENU】 → 【▲▼】: "Stop recording" → 【SELECT】
- You can continue the conversation with the outside caller.

Note:

- When recording is completed:
  – The total number of recordings will be added to the number of messages in the answering system.
  – 【▶】 on the base unit flashes.
  – "New message" is displayed.
  – Audible message alert sounds on base unit (page 44).
- To listen to the recorded conversation, refer "Listening to messages", page 43.
- 2 way recording is not available during conference calls.
- The recording will end in the following situations:
  – When 【FLASH】 is pressed.
  – When the hold or intercom feature is used.
- When memory is/becomes full:
  – "Memory full" is shown on the display.
  – An error tone sounds.

Call share

You can join an existing outside call.
To join the conversation, press 【📞】 when the other unit is on an outside call.

Note:

- When another user joins the conversation, the interrupt tone sounds.
- A maximum of 3 parties (including 1 outside party) can join a conversation using 2 extensions. **(3-way conference)**
- To prevent other users from joining your conversations with outside callers, turn call sharing mode off (page 34).
- A 2nd party cannot join an outside call that is being recorded (page 18).

Transferring calls, conference calls

Outside calls can be transferred or a conference call with an outside party can be made between handsets.

1 During an outside call, press 【MENU】.

2 【▲▼】: "Intercom" → 【SELECT】

3 【▲▼】: Select the desired unit. → 【SELECT】
- If you select "Voice paging", the call will be switched from the ear-receiver mode to the speakerphone mode.

4 Wait for the paged party to answer.
- If the paged party does not answer, press 【BACK】 to return to the outside call.

TGD83x(en)_1216_ver023.pdf 18 2020/12/16 14:04:16

5 **To complete the transfer:**
Press **[OFF]**.
To establish a conference call:
[MENU] → **[▲▼]**: "Conference" → **[SELECT]**
- To leave the conference, press **[OFF]**. The other 2 parties can continue the conversation.
- To put the outside call on hold: **[MENU]** → **[▲▼]**: "Hold" → **[SELECT]**
  To resume the conference: **[MENU]** → **[▲▼]**: "Conference" → **[SELECT]**
- To cancel the conference: **[MENU]** → **[▲▼]**: "Stop conference" → **[SELECT]**
  You can continue the conversation with the outside caller.

Intercom

Intercom calls can be made between handsets.

Note:
- When paging unit(s), the paged unit(s) beeps for 1 minute.
- If you receive an outside call while talking on the intercom, the interrupt tone sounds. To finish intercom, press **[OFF]**. To answer the call, press **[ ]**.
- To change the handset ringer volume and ringer tone for intercom, see page 32.

Making an intercom call

1 **[MENU]** → **[▲▼]**: "Intercom" → **[SELECT]**

2 **[▲▼]**: Select the desired unit or "Voice paging" → **[SELECT]**
- If you select "Voice paging", speak into the microphone after the beep. Your voice will be heard using the speakers of all handsets, until a paged party answers your page or until you press **[OFF]**.
  After the other party answers, the speakerphone mode is turned on.

3 When you finish talking, press **[OFF]**.

Note:
- You can also use the **[INTERCOM]** soft key, if displayed, to make intercom calls.
- You cannot use voice paging if other units are in use.

Answering an intercom call

1 Press **[ ]** to answer the page.

2 When you finish talking, press **[OFF]**.

Turning auto intercom on/off

This feature allows the handset to answer intercom calls automatically when it is called. You do not need to press **[ ]** or **[ ]**. When this feature is set to "On", the monitoring handset for the baby monitor feature (page 39) will also answer baby monitor calls automatically. The default setting is "Off".

1 **[MENU]** # 2 7 3

2 **[▲▼]**: Select the desired setting. → **[SAVE]** → **[OFF]**

Note:
- This feature is not available for all handsets paging and voice paging even if it is turned on.

TGD83x(en)_1216_ver023.pdf 19 2020/12/16 14:04:16

Answer by voice command

This feature allows you to answer incoming calls automatically with your voice. When your voice is detected, answered calls will automatically be directed to the speakerphone mode. The default setting is **"Off"**.

Important:

- Before using this feature, we recommend that you test it and adjust the voice command sensitivity as needed.
- For best performance, answer the call within a range of 50 cm (20 inches) to 1 m (40 inches).
- Once this feature is turned on, the Talking Caller ID will be activated automatically. To turn off the Talking Caller ID feature, see page 32.
- Ambient noise (dog barking, TV sound, etc.) may cause the unit to answer an incoming call.
- When this feature is used, the unit disconnects the call automatically after 3 minutes. You may hear a warning tone and the unit may prompt you to press ✱ to continue talking 1 minute before disconnecting.
- Once you press any key operations during a call, the call is continued.

Note:

- When a call is manually answered using a unit, voice detection will end, and the answer by voice command feature stops operating.
- This feature is not available while baby monitor is set to **"On"** (page 35).

Turning answer by voice command on/off

1 Press and hold ✱ for about 2 seconds.

2 **[▲▼]**: Select the desired setting. → **[SAVE]**
- If you selected **"Off"**, go to step 4 to exit.

3 **[YES]** → The unit will display and announce the voice command guidance.
- We recommend answering calls as demonstrated.
- There must be a 1 second pause between the two phrases.

4 **To stop**: Press **[STOP]**.
To playback: Press **[YES]**.
To exit: Press **[OFF]**.

Note:

- If you wish to turn on answer by voice command feature, select **"Tone 1"** to **"Tone 5"** as your ringer tone (page 32). If another ringer tone is selected, the unit will automatically use **"Tone 1"** as the default ringer tone.

Answer by voice command sensitivity

You can adjust the sensitivity of the answer by voice command. Increase or decrease the sensitivity to adjust the sound level needed to trigger the answer by voice command feature.

1 **[MENU]** # 1 0 7

2 **[▲▼]**: Select the desired setting. → **[SAVE]** → **[OFF]**

Answering calls

1 When the unit rings, speak clearly as demonstrated by the voice guidance. Refer to step 3, "Turning answer by voice command on/off", page 20.

2 When you finish talking, press **[OFF]**.

TGD83x(en)_1216_ver023.pdf 20 2020/12/16 14:04:16

Call block

You can press the 【CALL BLOCK】 button in the following situations to disconnect the current call and add a phone number to the call block list:
– when an incoming call is being received
– when an incoming call is being recorded by the answering system
– when talking on an outside call

Once a phone number has been added to the call block list, the unit will block calls from that phone number in the future.

1 Press 【CALL BLOCK】 under the situations shown above.

2 Confirm the call block number and press 【YES】.
- The call block number is stored in the call block list, confirmation tone sounds *1 and "Call blocked" is displayed, and then the call is disconnected.

*1 Confirmation tones are used with permission of © 2018 Copyrights Vision Inc.

Note:
- If the call has no phone number, the call is blocked but it is not stored in the call block list.
- The call block feature is not available for intercom calls or calls received by call waiting.
- Blocked calls are logged in the caller list.

Storing unwanted callers

The unit can block calls by storing the desired items in the call block list beforehand (Caller ID subscribers only).
– "Block a single number": The unit blocks calls from specific phone numbers stored in the call block list.
– "Block range of numbers": The unit blocks calls that begin with a number stored in the call block list, such as a toll-free phone number prefix or certain area codes.
– "Block unknown CID": The unit blocks calls that have no phone number.

Single phone numbers and ranges of numbers can be stored in the call block list up to 1,000 items in total.

Blocking unwanted callers:
When a call is received, the unit will not ring while caller information is being received*1.
If the caller's phone number matches an entry in the call block list, the unit emits no sound to the caller, and disconnects the call.

*1 If you want the first ring to sound, select "Yes" in "Turning the first ring on/off" (page 22).

Storing a single phone number

Important:
- We recommend storing 10 digits (including the area code). If only 7 digits are stored, all numbers that have the same last 7 digits will be blocked.

Adding call blocked numbers from the caller list

1 【▼】 CID

2 【▲▼】: Select the desired entry to be blocked.
- To edit the number: 【MENU】 → 【▲▼】: "Edit" → 【SELECT】
  Press 【EDIT】 repeatedly until the phone number is shown in the 10-digit format. → 【SAVE】 → 【▲▼】: "Call block" → 【SELECT】 → Go to step 4.

3 【CALL BLOCK】

4 【▲▼】: "Yes" → 【SELECT】

5 Edit the phone number if necessary (24 digits max.). → 【SAVE】 → 【OFF】

Adding call blocked numbers manually

1 【CALL BLOCK】

2 【▲▼】: "Block a single number" → 【SELECT】

3 【MENU】 → 【▲▼】: "Add" → 【SELECT】

TGD83x(en)_1216_ver023.pdf 21 2020/12/16 14:04:16

4 Enter the phone number (24 digits max.). → **[SAVE]** → **[OFF]**

Storing a range of number

1 **[CALL BLOCK]**

2 **[▲▼]**: "Block range of numbers" → **[SELECT]**

3 **[MENU]** → **[▲▼]**: "Add" → **[SELECT]**

4 Enter the desired number (2-8 digits). → **[SAVE]** → **[OFF]**

Blocking incoming calls that have no phone number

You can block calls when no phone number is provided, such as private callers or out of area calls.

1 **[CALL BLOCK]**

2 **[▲▼]**: "Block unknown CID" → **[SELECT]**

3 **[▲▼]**: Select the desired setting. → **[SAVE]** → **[OFF]**

Turning the first ring on/off

You can choose whether the first ring sounds when a call is received.
"Yes": The first ring for all calls will be heard, including calls from blocked phone numbers.
"No" (default): The first ring is muted for all calls. If this setting is selected, the unit will never ring for calls from blocked phone numbers.

1 **[CALL BLOCK]**

2 **[▲▼]**: "One ring for blocked call" → **[SELECT]**

3 **[▲▼]**: Select the desired setting. → **[SAVE]** → **[OFF]**

Viewing/editing/unblocking call block numbers

1 **[CALL BLOCK]**

2 **[▲▼]**: "Block a single number" or "Block range of numbers" → **[SELECT]**

3 **[▲▼]**: Select the desired entry.
- After viewing, press **[OFF]** to exit.

4 **To edit a number:**
[EDIT] → Edit the number. → **[SAVE]** → **[OFF]**
To unblock a number:
[UNBLOCK] → **[▲▼]**: "Yes" → **[SELECT]** → **[OFF]**

Note:
- When editing, press the desired dial key to add digits and press **[CLEAR]** to erase digits.

Unblocking all call block numbers

1 **[CALL BLOCK]**

2 **[▲▼]**: "Block a single number" or "Block range of numbers" → **[SELECT]**

3 **[MENU]** → **[▲▼]**: "Unblock all" → **[SELECT]**

4 **[▲▼]**: "Yes" → **[SELECT]**

5 **[▲▼]**: "Yes" → **[SELECT]** → **[OFF]**

Displaying and clearing the blocked call count

1 **[CALL BLOCK]**

2 **[▲▼]**: "Blocked calls count" → **[SELECT]**
- To exit, press **[OFF]**.

3 **[CLEAR]**

4 **[▲▼]**: "Yes" → **[SELECT]** → **[OFF]**

TGD83x(en)_1216_ver023.pdf 22 2020/12/16 14:04:16

Automated call block

With automated call block, the unit screens incoming calls before ringing for allowed calls, or ends the calls without ringing for calls identified as robocalls, telemarketing calls, or other undesirable calls (Caller ID subscribers only).
The unit will play the greeting message for automated call block and prompt the caller to enter an access code in order for the unit to identify whether the call is automated.
You can set the unit to block or unblock mode. The default setting is **"Unblock"**.

Note:

- The unit connects the call without prompting to enter the access code in the following situations:
  - the caller's phone number matches an entry in the phonebook (page 27).
  - the caller's name matches an entry in the allow name list (page 24).
  - the caller's phone number is memorized in the allowed number database (page 23).
- If the number is stored in the call block list (page 21), the unit disconnects the call without playing the greeting message for automated call block.
- When the answering system answers a call from a caller who is not registered in the phonebook, allow name list, or allowed number database, the following operations are delayed:
  - answering a call
  - remote turn on
  - toll saver
- When the unit receives a call from a caller who is not registered in the phonebook, allow name list, or allowed number database in the following situations, the unit shifts to standby mode:
  - when searching the phonebook, caller list, call block list, or allow name list
  - when programming (depending on settings)
  - when using the answering system
  - when paging all handsets
- Blocked calls are logged in the caller list. We recommend you to check the caller list periodically. If necessary, register the entry to the phonebook or allow name list to connect the call next time.

Allowed number database

Once the caller enters the access code, the caller's phone number is memorized in the allowed number database as an unblocked number. Callers from this database are allowed to connect without the access code from their next call.
100 entries can be stored to the database (22 digits max. each).

Note:

- When the database memory is full, the latest call received will replace the oldest number stored in the list.
- The numbers stored in the database will be erased when you change the access code (page 23).
- The numbers stored in the database cannot be displayed.

Setting the automated call block

1 【MENU】#7 8 7

2 【▲▼】: Select the desired setting. → 【SAVE】

3 【▲▼】: **"Yes"** → 【SELECT】 → 【OFF】

Note:

- We recommend you perform a test run of the automated call block procedure to ensure that the automated call block feature is set correctly.

Changing the access code

If the unit answers undesirable calls such as robocalls even though the automated call block function is on, change the access code (3 digits max.). The default setting is **"1"**.

1 【MENU】#7 8 9

2 【CLEAR】

3 Enter the new access code. → 【SAVE】 → 【OFF】

TGD83x(en)_1216_ver023.pdf 23 2020/12/16 14:04:16

Displaying and clearing the blocked call count

The total number of blocked calls (up to 65,000) will be displayed.

1 **[MENU]**#790
   - To exit, press **[OFF]**.
2 **[CLEAR]**
3 **[▲▼]**: **"Yes"** → **[SELECT]** → **[OFF]**

Adding to the allow name list

You can allow specific callers to pass through by adding the caller's name to the allow name list.
You can store up to 100 names (16 characters max.). If the name stored in the allow name list matches the incoming Caller ID, the unit rings. Callers listed in the allow name list are not required to enter the access code.

Adding allowed names from the caller list

1 **[▼]** CID
2 **[▲▼]**: Select the desired entry. → **[MENU]**
3 **[▲▼]**: **"Save allow name"** → **[SELECT]** → **[OFF]**

Viewing/erasing an entry

1 **[MENU]**#794
2 **[▲▼]**: Select the desired entry.
   - After viewing, press **[OFF]** to exit.
3 **[ERASE]** → **[▲▼]**: **"Yes"** → **[SELECT]** → **[OFF]**

Erasing all entries

1 **[MENU]**#794
2 **[ERASE]** → **[▲▼]**: **"Yes"** → **[SELECT]**
3 **[▲▼]**: **"Yes"** → **[SELECT]** → **[OFF]**

Greeting message for automated call block

When the unit answers a call, a greeting message is played to the caller.
You can use either:
– your own greeting message and pre-recorded greeting message
– pre-recorded greeting message

Recording a greeting message for automated call block

Using this feature, the unit can play your own greeting message and pre-recorded greeting message.
Example of your own greeting message:
"Hi, you have reached xxxxxx (Name)."
"Thank you for your calling, You have reached xxxxxx (Name)."
"Hi, you have reached the xxxxxx (Name) residence."

1 **[MENU]**#791
2 **[▲▼]**: **"Yes"** → **[SELECT]**
3 After a beep sounds, hold the handset about 20 cm (8 inches) away and speak clearly into the microphone (2 minutes max.).
4 Press **[STOP]** to stop recording.
5 The unit will play the recorded greeting message for automated call block. → **[OFF]**

Resetting to the pre-recorded greeting message for automated call block

This procedure will erase your greeting message for automated call block and reset to the pre-recorded one.

1 **[MENU]**#793
2 **[YES]** → **[OFF]**

Playing back the greeting message for automated call block

1 **[MENU]**#792

TGD83x(en)_1216_ver023.pdf 24 2020/12/16 14:04:16

2 To exit, press **[OFF]**.

Telemarketing call block

In addition to Automated call block (page 23), you can use Telemarketing call block to further screen calls to stop telemarketer calls from getting through.
Using this feature, you can ask callers to say their names, and after checking the names, you can decide whether to answer the calls or not.

Note:

- While screening calls, the call waiting feature is unavailable (page 17).

Operating telemarketing call block

1 During an outside call, lift the handset and then press **[TELE.BLK.]**.
  - The unit prompts callers to say their names.

2 **To answer the call:**
Press **[ ]** or **[ ]**.
To block the call:
Press **[CALL BLOCK]***1 → **[YES]**.
  - The unit announces that the call will be disconnected, and disconnects the call.
  - The caller will be registered to call block list.

*1 The user can still answer the call after pressing **[CALL BLOCK]**. To answer the call, press **[ ]** or **[ ]**.

Note:

- If there is no response from the caller, and the user does not press any keys in step 2 within 10 seconds, the unit will announce that the call will be disconnected, and disconnects the call.
- While on the charger, the **[TELE.BLK.]** key is not available. Lift the handset from the charger to use this feature.
- To use this feature, set the Auto talk feature to "**Off**".

One ring scam alert

The one ring scam alert feature notifies the user when calling back a number that is judged to be a scam call. This can help reduce the risk of calling back expense international numbers.
During an incoming call, if the caller disconnect the call after 1 or 2 rings, the call is judged to be a scam call. Depending on the number of rings made before a call is disconnected, a non-malicious call may also be judged as a scam call. The default setting is "**1 or 2 rings**".

Note:

- The call will not be judged as a scam call in the following conditions:
  - When a call is answered by pressing **[ ]** or **[ ]** (page 16).
  - When a call is screened by pressing **[TELE.BLK.]** (page 25).
  - When a call is answered with Answer by voice Command (page 20).
  - When a call is blocked with the call block feature (page 21).
  - When automated call block is set to "**Block**" (page 23).
  - When a call is answered by answering system.
    To use this feature, set the ring count for the answering system to more than the number of rings of the one ring scam alert (page 47).
  - When a call is answered by a voicemail service.
    To use this feature, set the ring count for the voicemail service to more than the number of rings of the one ring scam alert (call your service provider) (page 48).
  - When the caller's phone number matches an entry in the phonebook (page 27).
  - When you do not subscribe to the caller ID service.
  - When the call is disconnected before receiving caller ID information.
- During call waiting, the unit cannot judge whether the 2nd caller is a scam call.

TGD83x(en)_1216_ver023.pdf 25 2020/12/16 14:04:16

Setting the number of rings for one ring scam

1 **[MENU]**#79 8

2 **[▲▼]**: Select the desired setting. → **[SAVE]**

"1 ring" Judge 1 ring as a scam call.
"1 or 2 rings" Judge 1 ring or 2 rings as a scam call.
"Off" Turn off the setting and does not judge as scam calls.

Note:

- When a phone number is judged as a scam call, "⚠" will be displayed in the caller list unless:
  - the number is identified as Automated call block.
  - the number is stored in call block list.

TGD83x(en)_1216_ver023.pdf 26 2020/12/16 14:04:16

Phonebook

You can add 100 names (16 characters max.) and phone numbers (24 digits max.) to the phonebook, and assign each phonebook entry to the desired group (page 27).

Important:

- All entries can be shared by any registered handset.

Adding phonebook entries

1 【◄】 → 【MENU】
2 【▲▼】: "Add new entry" → 【SELECT】
3 Enter the party's name. → 【OK】
4 Enter the party's phone number. → 【OK】
5 【▲▼】: Select the desired group. → 【SELECT】 2 times → 【OFF】

Note:

- In step 3, you can switch the language for entering characters.
  # → 【▲▼】: Select the desired language. → 【OK】

Entering characters

Press the dial key that corresponds to the desired character. Press repeatedly to scroll through the available characters.
The following operations are also available.

Key	Operation
*	Switch between the uppercase and lowercase (A ↔ a)
【◄】【►】	Move the cursor
【CLEAR】	Erase the character or number ● To erase all, press and hold it.

- To enter another character that is located on the same dial key, first press 【►】 to move the cursor to the next space.
- If you do not press any dial key within 2 seconds after entering a character, the character is fixed and the cursor moves to the next space.

Storing a redial list number to the phonebook

Phone numbers of up to 24 digits can be stored in the phonebook.

1 【►】 REDIAL
2 【▲▼】: Select the desired entry. → 【SAVE】
3 To store the name, continue from step 3, "Editing entries", page 28.

Note:

- The name stored in the phonebook will be reflected in the redial list after you make a call using that phonebook entry.

Storing caller information to the phonebook

1 【▼】 CID
2 【▲▼】: Select the desired entry. → 【MENU】
   - To edit the number:
     【▲▼】: "Edit" → 【SELECT】
     Press 【EDIT】 repeatedly until the phone number is shown in the desired format. → 【SAVE】 → 【▲▼】: "Phonebook" → 【SELECT】 → Go to step 4.
3 【▲▼】: "Save phonebook" → 【SELECT】
4 Continue from step 3, "Editing entries", page 28.

Groups

Groups can help you find entries in the phonebook quickly and easily. You can change the names of groups assigned for phonebook entries ("Friends", "Family", etc.). By assigning different ringer tones for different groups of callers, you can identify who is calling (ringer ID), if you have subscribed to Caller ID service.

TGD83x(en)_1216_ver023.pdf 27 2020/12/16 14:04:16

Changing group names/setting ringer ID

The default group name is "Group 1" to "Group 9".

1 [◄] 📖 → [MENU]
2 [▲▼]: "Group" → [SELECT]
3 [▲▼]: Select the desired group. → [SELECT]
4 **To change group names**
[▲▼]: "Group name" → [SELECT] → Edit the name (10 characters max.). → [SAVE]
5 **To set group ringer tone**
[▲▼]: Select the current setting of the group ringer tone. → [SELECT] → [▲▼]: Select the desired ringer tone. → [SAVE]
6 [OFF]

Finding and calling from a phonebook entry

1 [◄] 📖
2 **To scroll through all entries**
[▲▼]: Select the desired entry.
To search by first character
① Press the dial key (0 to 9, or #) which contains the character you are searching for.
② [▲▼]: Scroll through the phonebook if necessary.
To search by group
① [GROUP]
② [▲▼]: Select the desired group. → [SELECT]
③ [▲▼]: Scroll through the phonebook if necessary.
3 [📞]

Editing entries

1 Find the desired entry (page 28).
2 [MENU] → [▲▼]: "Edit" → [SELECT]
3 Edit the name if necessary. → [OK]
4 Edit the phone number if necessary. → [OK]
5 [▲▼]: Select the desired group (page 27). → [SELECT] 2 times → [OFF]

Erasing entries

Erasing an entry

1 Find the desired entry (page 28).
2 [MENU] → [▲▼]: "Erase" → [SELECT]
3 [▲▼]: "Yes" → [SELECT] → [OFF]

Erasing all entries

1 [◄] 📖 → [MENU]
2 [▲▼]: "Erase all" → [SELECT]
3 [▲▼]: "Yes" → [SELECT]
4 [▲▼]: "Yes" → [SELECT] → [OFF]

Chain dial

This feature allows you to dial phone numbers in the phonebook while you are on a call. This feature can be used, for example, to dial a calling card access number or bank account PIN that you have stored in the phonebook, without having to dial manually.

1 During an outside call, press [◄] 📖.
2 [▲▼]: Select the desired entry.
3 Press [CALL] to dial the number.

Note:

- When storing a calling card access number and your PIN in the phonebook as one phonebook entry, press [▲] (Pause) to add pauses after the number and PIN as necessary (page 16).
- If you have rotary/pulse service, you need to press * before pressing [◄] 📖 in step 1 to change the dialing mode temporarily to tone. When adding entries to the phonebook, we recommend adding * to the beginning of phone numbers you wish to chain dial (page 27).

TGD83x(en)_1216_ver023.pdf 28 2020/12/16 14:04:16

Speed dial

You can assign 1 phone number to each of the dial keys (1 to 9) on the handset.

Adding phone numbers to speed dial keys

■ **By entering phone numbers:**

1. Press and hold the desired speed dial key (1 to 9). → **[ADD]**
2. **[▲▼]**: "Manual" → **[SELECT]**
3. Enter the party's name (16 characters max.). → **[OK]**
4. Enter the party's phone number (24 digits max.). → **[OK]** → **[SELECT]** → **[OFF]**

■ **From the phonebook:**

1. Press and hold the desired speed dial key (1 to 9). → **[ADD]**
2. **[▲▼]**: "Phonebook" → **[SELECT]**
3. **[▲▼]**: Select the desired entry. → **[SAVE]** → **[OFF]**

Note:

- If you edit a phonebook entry which is assigned to a speed dial key, the edited entry does not transfer to the speed dial key.

Editing an entry

1. Press and hold the desired speed dial key (1 to 9). → **[MENU]**
2. **[▲▼]**: "Edit" → **[SELECT]**
3. Edit the name if necessary. → **[OK]**
4. Edit the phone number if necessary. → **[OK]** → **[SELECT]** → **[OFF]**

Erasing an entry

1. Press and hold the desired speed dial key (1 to 9). → **[MENU]**
2. **[▲▼]**: "Erase" → **[SELECT]**
3. **[▲▼]**: "Yes" → **[SELECT]** → **[OFF]**

Viewing an entry/Making a call

1. Press and hold the desired speed dial key (1 to 9).
2. To make a call, press **[ ]**.

TGD83x(en)_1216_ver023.pdf 29 2020/12/16 14:04:16

Menu list

To access the features, there are 2 methods.

■ **Scrolling through the display menus**

1 【MENU】
2 Press 【▼】 or 【▲】 to select the desired main menu. → 【SELECT】
3 Press 【▼】 or 【▲】 to select the desired item from the next sub-menus. → 【SELECT】
4 Press 【▼】 or 【▲】 to select the desired setting. → 【SAVE】

■ **Using the direct command code**

1 【MENU】 → Enter the desired code.
Example: Press 【MENU】#101.
2 Select the desired setting. → 【SAVE】

Note:

- To exit the operation, press 【OFF】.
- In the following table, < > indicates the default settings.
- In the following table, ☞ indicates the reference page number.
- Display menu order and sub-menu may vary depending on your model.

Display menu tree and direct command code table

Main menu: 📖 "Phonebook"

Operation	Code	☞
Viewing the phonebook entry.	**#280**	28

Main menu: "Caller list"

Operation	Code	☞
Viewing the caller list.	**#213**	40

Main menu: "Answering device"

Sub-menu 1	Sub-menu 2	Settings	Code	☞
Play new message	–	–	**#323**	43
Play all message	–	–	**#324**	43
Erase all message*1	–	–	**#325**	44
Greeting	Record greeting*1	–	**#302**	42
	Check greeting	–	**#303**	43
	Pre-recorded*1 (Reset to pre-recorded greeting)	–	**#304**	43

TGD83x(en)_1216_ver023.pdf 30 2020/12/16 14:04:16

Sub-menu 1	Sub-menu 2	Settings	Code	☞
New message alert*1	Outgoing call – On/Off	On <Off>	#338	44
	Outgoing call – Notification to	–		
	Outgoing call – Remote code	Activate <Inactivate>		
	Base unit beep	On <Off>	#339	44
Settings	Ring count*1	Toll saver 2-7 rings <4 rings>	#211	47
	Recording time*1	<3 min> 1 min Greeting only*2	#305	47
	Remote code*1	<111>	#306	46
	Screen call	<On> Off	#310	47
Answer on*1	–	–	#327	42
Answer off*1	–	–	#328	42

Main menu: ✉ "Voicemail access"

Operation	Code	☞
Listening to voicemail messages.	#330	48

Main menu: 📞 "Intercom"

Operation	Code	☞
Paging the desired unit.	#274	19

Main menu: ◷ "Set date & time"

Sub-menu 1	Sub-menu 2	Settings	Code	☞
Date and time*1	–	–	#101	14
Memo alarm	Alarm1-3	<Off> Once Daily Weekly	#720	36
Time adjustment*1, *3	–	<Caller ID auto> Manual	#226	–

TGD83x(en)_1216_ver023.pdf 31 2020/12/16 14:04:16

Programming

Main menu: “Speed dial”

Operation	Code	☞
Viewing the speed dial entry.	**#261**	29

Main menu: “Settings”

Sub-menu 1	Sub-menu 2	Settings	Code	☞
Ring adjustments	Ringer volume (Incoming) (Handset)	Off–6 <6>	**#160**	–
	Intercom ringer volume (Handset)	1–6 <6>	**#175**	–
	Ringer tone (Incoming)*4, *5 (Handset)	<Tone 1>	**#161**	–
	Intercom ringer tone*4, *5 (Handset)	<Tone 3>	**#163**	–
	Silent mode (Handset) – On/Off	On <Off>	**#238**	37
	Silent mode (Handset) – Start/End	<11:00 PM/ 06:00 AM>	**#237**	37
	Silent mode (Handset) – Select group	Group 1-9	**#241**	37
Set date & time	Date and time*1	–	**#101**	14
	Memo alarm – Alarm1-3	<Off> Once Daily Weekly	**#720**	36
	Time adjustment*1, *3	<Caller ID auto> Manual	**#226**	–
Talking caller ID	Handset	<On> Off	**#162**	40
	Base unit*1	On <Off>	**#✱162**	
Low battery alert	–	Off <Every hour> Every 3 hours Every 6 hours	**#176**	15

TGD83x(en)_1216_ver023.pdf 32 2020/12/16 14:04:16

Sub-menu 1	Sub-menu 2	Settings	Code	☞
Key detector setting*6 – 1:Add new device (for Detector1)*7 – 2:Add new device (for Detector2) – 3:Add new device (for Detector3) – 4:Add new device (for Detector4)	Change name*1	Detector1	#6561	–
		Detector2*8	#6562*8	
		Detector3*8	#6563*8	
		Detector4*8	#6564*8	
	Registration	–	#6571	–
			#6572*8	
			#6573*8	
			#6574*8	
	Deregistration	–	#6581	–
			#6582*8	
			#6583*8	
			#6584*8	
One ring scam*1	–	1 ring <1 or 2 rings> Off	#798	25
Automated call block*1	Block/Unblock	Block <Unblock>	#787	23
	Allow name list	–	#794	24
	Access code	<1>	#789	23
	Automated call greeting	Record greeting	#791	24
		Check greeting	#792	24
		Pre-recorded	#793	24
	Blocked calls count	–	#790	24
Call block*1	Block a single number	–	#217	21
	Block range of numbers	–		22
	Block unknown CID (CID: Caller ID)	Block <Unblock>	#240	22
	One ring for blocked call	Yes <No>	#173	22
	Blocked calls count	–	#177	22
Speed dial	–	–	#261	29
Record greeting*1	–	–	#302	42

TGD83x(en)_1216_ver023.pdf 33 2020/12/16 14:04:17

Sub-menu 1	Sub-menu 2	Settings	Code	☞
Voicemail	Save VM access#[*1] (VM: Voicemail)	–	#331	48
	VM tone detect[*1]	<On> Off	#332	48
LCD contrast (Display contrast)	–	Level 1–4 <2>	#145	–
Handset name	–	–	#104	39
Display name	–	On <Off>	#105	39
Answer by voice command[*1]	On/Off	On <Off>	#106	20
	Sensitivity level	Low <Normal> High	#107	20
Auto intercom	–	On <Off>	#273	19
Key tone	–	<On> Off	#165	–
Caller ID edit (Caller ID number auto edit)	–	<On> Off	#214	41
Auto talk[*9]	–	On <Off>	#200	16
Set tel line	Set dial mode[*1]	<Tone> Pulse	#120	15
	Set flash time[*1, *10]	80 ms 90 ms 100 ms 110 ms 160 ms 200 ms 250 ms 300 ms 400 ms 600 ms <700 ms> 900 ms	#121	17
	Set line mode[*1, *11]	A <B>	#122	–
Call sharing[*1]	–	<On> Off	#194	18

TGD83x(en)_1216_ver023.pdf 34 2020/12/16 14:04:17

Sub-menu 1	Sub-menu 2	Settings	Code	☞
Registration	Register handset	–	**#130**	39
	Deregistration*2	–	**#131**	39
Change language	Display	<English> Español	**#110**	14
	Announcement*1	<English> Español	**#112**	14

Main menu: “Customer support”

Operation	Code	☞
Displaying customer support Web address.	**#680**	–

Main menu: “Baby monitor”

Sub-menu 1	Sub-menu 2	Settings	Code	☞
On/Off	–	On <Off>	**#268**	37
Sensitivity level	–	Low <Middle> High	**#269**	38

Main menu: “Key detector”*6

Sub-menu 1	Sub-menu 2	Settings	Code	☞
Search	–	–	**#655**	–
Battery check	–	–		

*1 If you program these settings using one of the units, you do not need to program the same item using another unit.
*2 This menu is not displayed when scrolling through the display menus. It is only available in direct command code.
*3 This feature allows the unit to automatically adjust the date and time each time caller information including date and time is received.
To turn this feature on, select “Caller ID auto”. To turn this feature off, select “Manual”. (Caller ID subscribers only)
To use this feature, set the date and time first (page 14).
*4 The preset melodies in this product (“Melody 1” - “Melody 10”) are used with permission of © 2009 - 2012 Copyrights Vision Inc.
*5 If you subscribe to a distinctive ring service (such as IDENTA-RING), select a tone (tone 1 to 5). If you select a melody, you cannot distinguish lines by their ringers.
*6 This setting is available when you have the key detector (KX-TGA20). Read the installation manual for more information on the key detector.
*7 For models with supplied key detectors, the display shows “1: Detector1”.
*8 If you register 2 or more key detectors.
*9 If you subscribe to a Caller ID service and want to view the caller’s information after lifting up the handset to answer a call, turn off this feature.

TGD83x(en)_1216_ver023.pdf 35 2020/12/16 14:04:17

*10 The flash time depends on your telephone exchange or host PBX. Contact your PBX supplier if necessary. The setting should stay at **"700 ms"** unless pressing **【FLASH】** fails to pick up the waiting call.
*11 Generally, the line mode setting should not be changed. This setting automatically maintains receiver volume at the proper level depending on the current telephone line condition. Set the line mode to **"A"** if telephone line condition is not good.

Alarm

An alarm sounds at the set time for 1 minute and is repeated 5 times at 5 minute intervals (snooze function). A text memo can also be displayed for the alarm. A total of 3 separate alarm times can be programmed for each handset. You can set one of 3 different alarm options (once, daily, or weekly) for each alarm time.

Important:

- Make sure the unit's date and time setting is correct (page 14).

1 **【MENU】#720**

2 **【▲▼】**: Select the desired alarm. → **【SELECT】**

3 **【▲▼】**: Select the desired alarm option. → **【SELECT】**

"Off" Turns alarm off. Go to step 10.
"Once" An alarm sounds once at the set time.
"Daily" An alarm sounds daily at the set time. Go to step 5.
"Weekly" Alarm sounds weekly at the set time(s).

4 Proceed with the operation according to your selection in step 3.

■ **Once:**
Enter the desired month and date. → **【OK】**

■ **Weekly:**
【▲▼】: Select the desired day of the week and press **【SELECT】**. → **【OK】**

5 Set the desired time.

6 **【*】**: Select **"AM"** or **"PM"**. → **【OK】**

7 Enter a text memo (10 characters max.). → **【OK】**

8 **【▲▼】**: Select the desired alarm tone. → **【SELECT】**
- We recommend selecting a different ringer tone from the one used for outside calls.

9 **【▲▼】**: Select the desired snooze setting. → **【SAVE】**

10 **【SELECT】** → **【OFF】**

Note:

- Press **【STOP】** to stop the alarm completely.
- When the handset is in use, the alarm will not sound until the handset is in standby mode.
- Press any dial key or **【SNOOZE】** to stop the sound but keep the snooze function activated.
- If you want to make an outside call when the snooze function is activated, please stop the snooze function before making the call.

Silent mode

Silent mode allows you to select a period of time during which the handset will not ring for outside calls. This feature is useful for time periods when you do not want to be disturbed, for example, while sleeping. Silent mode can be set for each unit.
Using the phonebook's group feature (page 27), you can also select groups of callers whose calls override silent mode and ring the unit (Caller ID subscribers only).

TGD83x(en)_1216_ver023.pdf 36 2020/12/16 14:04:17

Important:

- Make sure the unit's date and time setting is correct (page 14).
- We recommend turning the base unit ringer off (page 16) in addition to turning the silent mode on.
- If you have set the alarm, the alarm sounds even if the silent mode is turned on.

Turning silent mode on/off

1 【MENU】#2 3 8
2 【▲▼】: Select the desired setting. → 【SAVE】
   - If you select "Off", press 【OFF】 to exit.
3 Enter the desired hour and minute you wish to start this feature.
4 ⊛: Select "AM" or "PM". → 【OK】
5 Enter the desired hour and minute you wish to end this feature.
6 ⊛: Select "AM" or "PM".
7 【SAVE】 → 【OFF】

Changing the start and end time

1 【MENU】#2 3 7
2 Continue from step 3, "Turning silent mode on/off", page 37.

Selecting groups to bypass silent mode

1 【MENU】#2 4 1
2 【▲▼】: Select the desired groups. → 【SELECT】
   - "✓" is displayed next to the selected group numbers.
   - To cancel the selected group: 【▲▼】: Select the group. → Press 【SELECT】 again. "✓" disappears.
3 【SAVE】 → 【OFF】

Baby monitor

This feature allows you to listen in on a room where another handset is located, allowing you to easily monitor from different areas of the house or even while away from home. The monitored handset (placed in a baby's room, for example) will automatically call the monitoring handset, or the phone number stored when it detects sound.

Important:

- Before using this feature, we recommend that you test it and adjust the baby monitor sensitivity as needed, especially if you plan to monitor from outside.
- This feature should not be used as a substitute for a medical or caregiver's supervision. It is the caregiver's responsibility to stay close enough to handle any eventuality.

Note:

- During the monitoring mode, battery consumption is faster than usual. We recommend leaving the monitored handset on charger.
- The monitored handset never rings while it is being monitored. If the base unit is placed near the monitored handset, we recommend turning off the base unit ringer volume (page 16).

Setting the baby monitor

Perform the setting operation with the handset to be monitored (for example, the handset placed in a baby's room).

To monitor with a handset

The internal baby monitor feature is only available between handsets.

1 【MENU】#2 6 8
2 【▲▼】: "On" → 【SELECT】
3 【▲▼】: Select the desired handset's number to monitor with. → 【SAVE】
   - "Baby monitor" will be displayed.
   - The registered handset's name/number is displayed.

TGD83x(en)_1216_ver023.pdf 37 2020/12/16 14:04:17

Note:

- When this feature is on, another handset can hear the monitored handset by making an intercom call.

To monitor from outside

If you enable this feature, the unit will call a pre-programmed phone number when the handset detects sound. After you answer the call, you can listen in on the room where the handset is located.

■ **From the phonebook:**

1. 【MENU】#268
2. 【▲▼】: "On" → 【SELECT】
3. 【▲▼】: Select "Outgoing call" to monitor from outside. → 【ADD】
4. 【▲▼】: "Phonebook" → 【SELECT】
5. 【▲▼】: Select the phonebook entry. → 【SAVE】
   - "Baby monitor" will be displayed.

Note:

- If you edit a phonebook entry which is assigned for monitoring, the edited entry does not transfer to the monitor.

■ **By entering phone numbers:**

1. 【MENU】#268
2. 【▲▼】: "On" → 【SELECT】
3. 【▲▼】: Select "Outgoing call" to monitor from outside. → 【ADD】
4. 【▲▼】: "Manual" → 【SELECT】
5. Enter the desired name. → 【OK】
6. Enter the desired number. → 【OK】 → 【SELECT】
   - "Baby monitor" will be displayed.

Note:

- The registered name/number is displayed.

Turning off the baby monitor

The monitored handset cannot be used while baby monitor is set to "On".

1. Press 【MENU】 on the handset being monitored.
2. 【▲▼】: "On/Off" → 【SELECT】
3. 【▲▼】: "Off" → 【SELECT】 → 【OFF】

Editing an outside monitoring number

1. Press 【MENU】 on the handset being monitored.
2. 【▲▼】: "On/Off" → 【SELECT】
3. 【▲▼】: "On" → 【SELECT】
4. 【▲▼】: Select the outside line. → 【MENU】
5. 【▲▼】: "Edit" → 【SELECT】
6. Edit the name if necessary. → 【OK】
7. Edit the phone number if necessary. → 【OK】 → 【SELECT】

Erasing an outside monitoring number

1. Press 【MENU】 on the handset being monitored.
2. 【▲▼】: "On/Off" → 【SELECT】
3. 【▲▼】: "On" → 【SELECT】
4. 【▲▼】: Select the outside line. → 【MENU】
5. 【▲▼】: "Erase" → 【SELECT】
6. 【▲▼】: "Yes" → 【SELECT】 → 【OFF】

Baby monitor sensitivity

You can adjust the sensitivity of the baby monitor. Increase or decrease the sensitivity to adjust the sound level needed to trigger the baby monitor feature.

- This feature cannot be set during a monitoring call.

1. Press 【MENU】 on the handset being monitored.
2. 【▲▼】: "Sensitivity level" → 【SELECT】
3. 【▲▼】: Select the desired setting. → 【SAVE】 → 【OFF】

Answering the baby monitor

■ **When monitoring with a handset:**
Press 【📞】 to answer a call.
If you want to respond from the monitoring handset, press 【MUTE】.

TGD83x(en)_1216_ver023.pdf 38 2020/12/16 14:04:17

- The monitoring handset will answer calls automatically when the auto intercom feature is set to "On" (page 19).

Note:

- If you receive an outside call when communicating with the monitored handset, the interrupt tone sounds. To answer the call, press 【OFF】, then press 【 】.

■ **When monitoring from outside:**
Answer the call.
If you want to respond from your monitoring phone, press #1 using tone dialing.
You can turn off the baby monitor feature by pressing #0.

Note:

- The unit disconnects the call automatically after 2 minutes.

Other programming

Changing the handset name

The default handset name is "Handset 1" to "Handset 6". You can customize the name of each handset ("Bob", "Kitchen", etc.). This is useful when you make intercom calls between handsets. To display the handset name in standby mode, turn on the handset name display feature (page 39).

1 【MENU】#104
2 Enter the desired name (10 characters max.). → 【SAVE】 → 【OFF】

Displaying the handset name

You can select whether or not the handset name is displayed in standby mode. The default setting is "Off".

1 【MENU】#105
2 【▲▼】: Select the desired setting. → 【SAVE】 → 【OFF】

Registering a unit

Operating additional units

Additional handsets

Up to 6 handsets can be registered to the base unit.

Important:

- See page 4 for information on the available model.

Registering a handset to the base unit

The supplied handset and base unit are pre-registered. If for some reason the handset is not registered to the base unit, re-register the handset.

1 **Handset:**
【MENU】#130
2 **Base unit:**
Press and hold 【LOCATOR】 for about 5 seconds.
- If all registered handsets start ringing, press 【LOCATOR】 again to stop, then repeat this step.

3 **Handset:**
Press 【OK】, then wait until a long beep sounds.

Deregistering a handset

A handset can cancel its own registration to the base unit, or other handsets registered to the same base unit. This allows the handset to end its wireless connection with the system.

1 【MENU】#131
- All handsets registered to the base unit are displayed.

2 【▲▼】: Select the handset you want to cancel. → 【SELECT】
3 【▲▼】: "Yes" → 【SELECT】 → 【OFF】

TGD83x(en)_1216_ver023.pdf 39 2020/12/16 14:04:17

Using Caller ID service

Important:

- This unit is Caller ID compatible. To use Caller ID features, you must subscribe to a Caller ID service. Contact your phone service provider for details.

Caller ID features

When an outside call is being received, the caller information is displayed.
Caller information for the last 50 callers is logged in the caller list from the most recent call to the oldest.

- If the unit cannot receive caller information, the following is displayed:
  - **"Out of area"**: The caller dials from an area which does not provide a Caller ID service.
  - **"Private caller"**: The caller requests not to send caller information.
  - **"Long distance"**: The caller makes a long distance call.
- If the unit is connected to a PBX system, caller information may not be properly received. Contact your PBX supplier.

Missed calls

If a call is not answered, the unit treats it as a missed call. The display shows **"Missed call"**.

Note:

- Even when there are unviewed missed calls, **"Missed call"** disappears from the standby display if the following operation is performed by one of the units:
  - A handset is replaced on the base unit or charger.
  - Pressing **[OFF]** on a handset.

Phonebook name display

When caller information is received and it matches a phone number stored in the phonebook, the stored name in the phonebook is displayed and logged in the caller list.

Talking Caller ID

Handset / Base unit

This feature lets you know who is calling without looking at the display.
To use this feature, you must:
- subscribe to a Caller ID service of your phone service provider.
- turn this feature on (page 32).

When caller information is received, the handsets and/or base unit announce the caller's name or phone number received from your phone service provider following every ring.

- Name pronunciation may vary. This feature may not pronounce all names correctly.
- Caller ID service has a limit of how many characters can be displayed. If the caller's name is too long, the unit may not be able to display or announce the entire name.

Phonebook name announcement

When caller information is received and it matches a phone number stored in the phonebook, the stored name in the phonebook is announced.

Caller list

Important:

- Make sure the unit's date and time setting is correct (page 14).

Viewing the caller list and calling back

1 **[▼]** CID

2 Press **[▼]** to search from the most recent call, or **[▲]** to search from the oldest call.

3 To call back, press **[ ]**.
- If you select an entry with "⊘#", "⊘✱" or "⚠" displayed, an error tone sounds.
  Wait for 2 seconds until a confirmation message is displayed. Press **[YES]** if you want to call back.

TGD83x(en)_1216_ver023.pdf 40 2020/12/16 14:04:17

To exit, press **[OFF]**.

Note:

- If the entry has already been viewed or answered, "✓" is displayed.
  - "⊘#" or "⊘" indicates the caller information for blocked calls.
  - "⚠" indicates the caller information for scam calls.

Editing a caller's phone number

You can edit a phone number in the caller list by removing its area code and/or the long distance code "1".

1 **[▼]** CID
2 **[▲▼]**: Select the desired entry. → **[MENU]**
3 **[▲▼]**: "**Edit**" → **[SELECT]**
4 Press **[EDIT]** repeatedly until the phone number is shown in the desired format.
5 **[📞]**

Caller ID number auto edit feature

Once you call back an edited number, the unit which was used to call back remembers the area code and format of the edited number. The next time someone calls from the same area code, caller information is customized by the unit as follows:

– When the call is being received, the Caller ID number is displayed in the same format as the edited number.
– After the call has ended, the caller's phone number is displayed in the same format as the edited number, when reviewed from the caller list.

For example, you can use this feature to set the unit to ignore the area code of callers in your area, so that you can call these local numbers using caller information without dialing the area code.
To activate this feature, you must edit an entry in the caller list, then call that number. After that, phone numbers from that caller's area code are edited automatically.
This feature can be set for each unit (page 34). The default setting is "**On**".

Note:

- Phone numbers from the 4 most recently edited area codes are automatically edited.

Erasing selected caller information

1 **[▼]** CID
2 **[▲▼]**: Select the desired entry.
3 **[ERASE]** → **[▲▼]**: "**Yes**" → **[SELECT]** → **[OFF]**

Erasing all caller information

1 **[▼]** CID
2 **[ERASE]** → **[▲▼]**: "**Yes**" → **[SELECT]** → **[OFF]**

TGD83x(en)_1216_ver023.pdf 41 2020/12/16 14:04:17

Answering system

The answering system can answer and record calls for you when you are unavailable to answer the phone.
The unit can be set to play a greeting message but not to record caller messages by selecting "**Greeting only**" as the recording time setting (page 47).
You can also record phone conversations (page 18).

Important:

- Make sure the unit's date and time setting is correct (page 14).

Memory capacity (including your greeting message)

The total recording capacity is about 17 minutes. A maximum of 64 messages can be recorded.

Note:

- When message memory becomes full:
  - "**Messages full**" is shown on the handset display.
  - The message counter on the base unit flashes if the answering system is turned on.
  - If you use the pre-recorded greeting message, the unit automatically switches to another pre-recorded greeting message asking callers to call again later.
  - If you recorded your own greeting message, the same message is still announced to callers even though their messages are not recorded.

Turning the answering system on/off

Base unit

Press **[ANSWER ON/OFF]** to turn on/off the answering system.

Handset

1 **To turn on:**
[MENU]#327
To turn off:
[MENU]#328

2 **[OFF]**

Note for base unit and handset:

- When the answering system is turned on, the message counter on the base unit displays the total number of messages (old and new).

Greeting message

When the unit answers a call, a greeting message is played to callers.
You can use either:
– your own greeting message
– a pre-recorded greeting message

Recording your greeting message

1 **[MENU]**#302

2 **[▲▼]**: "**Yes**" → **[SELECT]**

3 After a beep sounds, speak clearly about 20 cm (8 inches) away from the microphone (2 minutes max.).

4 Press **[STOP]** to stop recording. → **[OFF]**

Using a pre-recorded greeting message

The unit provides 2 pre-recorded greeting messages:
– If you reset to pre-recorded greeting or do not record your own greeting message, the unit plays a pre-recorded greeting asking callers to leave a message.
– If the message recording time (page 47) is set to "**Greeting only**", callers' messages are not recorded and the unit plays a different pre-recorded greeting message asking callers to call again.

TGD83x(en)_1216_ver023.pdf 42 2020/12/16 14:04:17

Resetting to a pre-recorded greeting message

Use this procedure to erase your greeting message and use a pre-recorded one.

1 【MENU】#304

2 【YES】→【OFF】

Playing back the greeting message

1 【MENU】#303

2 To exit, press 【OFF】.

Listening to messages

Important:

- When using the base unit or handset to listen to messages, the noise reduction feature (page 17) is activated automatically in spite of the setting (NR is not displayed).

Using the base unit

When new messages have been recorded, the message indicator (▶) on the base unit flashes.
Press 【▶■】(PLAY).

- During playback, the message indicator (▶) on the base unit lights.
- If new messages have been recorded, the base unit plays back new messages.
- If there are no new messages, the base unit plays back all messages.

Operating the answering system during playback

Key	Operation
【+】or【−】	Adjust the speaker volume
【I◀◀】	Repeat message*1
【▶▶I】	Skip message
【▶■】(STOP)	Stop playback
【ERASE】	Erase currently playing message

*1 If pressed within the first 5 seconds of a message, the previous message is played.

Erasing all messages

Press 【ERASE】2 times while the unit is not in use.

Using the handset

When new messages have been recorded, "New message" is displayed.

1 **To listen to new messages:**
【MENU】#323
To listen to all messages:
【MENU】#324

2 When finished, press 【OFF】.

Note:

- To switch to the receiver, press 【 】.
- You can also use the 【PLAY】soft key, if displayed, to play new messages.

Operating the answering system

【MENU】→【▲▼】: "Answering device"→【SELECT】

Key	Operation
【▲】or【▼】	Adjust the receiver/speaker volume (during playback)
1 or【◀】	Repeat message (during playback)*1
2 or【▶】	Skip message (during playback)
3	Enter the "Settings" menu
4	Play new messages
5	Play all messages
6	Play greeting message
76	Record greeting message
8	Turn answering system on
【PAUSE】	Pause message*2

TGD83x(en)_1216_ver023.pdf 43 2020/12/16 14:04:17

Key	Operation
9 or [STOP]	Stop recording Stop playback
0	Turn answering system off
* 4 *3	Erase currently playing message
* 5	Erase all messages
* 6	Reset to a pre-recorded greeting message

*1 If pressed within the first 5 seconds of a message, the previous message is played.
*2 To resume playback:
[▲▼]: "Playback" → [SELECT]
*3 You can also erase as follows:
[PAUSE] → [▲▼]: "Erase" → [SELECT] → [▲▼]: "Yes" → [SELECT]

Calling back (Caller ID subscribers only)

1 Press [PAUSE] during playback.
2 [▲▼]: "Call back" → [SELECT]

Editing the number before calling back

1 Press [PAUSE] during playback.
2 [▲▼]: "Edit & Call" → [SELECT]
3 Press [EDIT] repeatedly until the phone number is shown in the desired format (page 41). → [ ]

Erasing all messages

1 [MENU] # 3 2 5
2 [▲▼]: "Yes" → [SELECT] → [OFF]

Advanced new message alerting features

Audible message alert

This feature allows the base unit to beep to inform you of a new message arrival when new messages are recorded. The base unit beeps 2 times every minute until you listen to the messages, if the "Base unit beep" setting is turned on. The default setting is "Off".

1 [MENU] # 3 3 9
2 [▲▼]: Select the desired setting. → [SAVE] → [OFF]

New message alert by a call

This feature allows you to receive a notification by phone when new messages are recorded. The base unit calls a phone number you specify. You can then operate the answering system remotely to listen to the new message.
To use this feature, you must:
– store a phone number to which the unit makes the call to.
– turn on the new message alert setting.
After you answer the new message alert call, you can listen to messages from that call (page 45).

Important:

- A new message alert is stopped 1 minute after the unit starts to call. The unit will not retry the call even if the call is not answered.

Storing a phone number to which the unit makes an alert call

■ **From the phonebook:**

1 [MENU] # 3 3 8
2 [▲▼]: "Notification to" → [SELECT] → [ADD]
3 [▲▼]: "Phonebook" → [SELECT]
4 [▲▼]: Select the desired phonebook entry. → [SAVE] → [OFF]

TGD83x(en)_1216_ver023.pdf 44 2020/12/16 14:04:17

■ **By entering a phone number:**

1 【MENU】#338
2 【▲▼】: "Notification to" → 【SELECT】 → 【ADD】
3 【▲▼】: "Manual" → 【SELECT】
4 Enter the desired name (16 characters max.). → 【OK】
5 Enter the desired number (24 digits max.). → 【OK】 → 【SELECT】 → 【OFF】

Turning on/off the new message alert setting

1 【MENU】#338
2 【▲▼】: "On/Off" → 【SELECT】
3 【▲▼】: Select the desired setting→ 【SAVE】 → 【OFF】

Editing the set phone number

1 【MENU】#338
2 【▲▼】: "Notification to" → 【SELECT】
3 【MENU】 → 【▲▼】: "Edit" → 【SELECT】
4 Edit the name if necessary (16 characters max.). → 【OK】
5 Edit the phone number if necessary (24 digits max.). → 【OK】 → 【SELECT】 → 【OFF】

Erasing the set phone number

1 【MENU】#338
2 【▲▼】: "Notification to" → 【SELECT】
3 【MENU】 → 【▲▼】: "Erase" → 【SELECT】
4 【▲▼】: "Yes" → 【SELECT】 → 【OFF】
- The new message alert setting is turned off.

Activating/inactivating the remote access code to play messages

If you activate this feature, you must enter the remote access code (page 46) to play the new message from the new message alert call. This is so that unauthorized parties cannot listen to your messages. The default setting is "Inactivate".

– "Inactivate": You can listen to the message by pressing 4 to play new messages (without entering the remote access code).
– "Activate": You must enter your remote access code and then press 4 to play new message.

1 【MENU】#338
2 【▲▼】: "Remote code" → 【SELECT】
3 【▲▼】: Select the desired setting→ 【SAVE】 → 【OFF】

Listening to messages

After you answer the new message alert, you can listen to the messages as follows.

■ **When the remote access code is set to "Inactivate":**
Press 4 to play the new message during the announcement.

■ **When the remote access code is set to "Activate":**

1 Enter the remote access code (page 46) during the announcement.
2 Press 4 to play the new message.

Note:

- Within 10 seconds after listening to new messages, you can press #9 during the call to turn off the new message alert by a call feature.
- Even if the unit makes a new message alert call, the handset redial list does not show the record.

Remote operation

Using a touch-tone phone, you can call your phone number from outside and access the unit to listen to messages or change answering system settings. The unit's voice guidance prompts you to press certain dial keys to perform different operations.

TGD83x(en)_1216_ver023.pdf 45 2020/12/16 14:04:17

Remote access code

A 3-digit remote access code must be entered when operating the answering system remotely. This code prevents unauthorized parties from listening to your messages remotely. The default setting is "111".

Important:

- To prevent unauthorized access to this product, we recommend that you regularly change the remote code.

1 【MENU】#306

2 Enter the desired 3-digit remote access code. → 【SAVE】 → 【OFF】

Deactivating remote operation

Press * in step 2 on "Remote access code", page 46.

- The entered remote access code is deleted.

Using the answering system remotely

1 Dial your phone number from a touch-tone phone.

2 After the greeting message starts, enter your remote access code.

3 Follow the voice guidance prompts as necessary or control the unit using remote commands (page 46).

4 When finished, hang up.

Voice guidance

■ **When the English voice guidance is selected**
During remote operation, the unit's voice guidance starts and prompts you to press 1 to perform a specific operation, or press 2 to listen to more available operations.

■ **When the Spanish voice guidance is selected**
To start the voice guidance, press 9. The voice guidance announces the available remote commands (page 46).

Note:

- If you do not press any dial keys within 10 seconds after a voice guidance prompt, the unit disconnects your call.

Remote commands

You can press dial keys to access certain answering system functions without waiting for the voice guidance to prompt you.

Key	Operation
1	Repeat message (during playback)*1
2	Skip message (during playback)
4	Play new messages
5	Play all messages
9	Stop playback*2 Start voice guidance*3
0	Turn answering system off
*4	Erase currently playing message
*5	Erase all messages
*#	End remote operation (or hang up)

*1 If pressed within the first 5 seconds of a message, the previous message is played.
*2 For English voice guidance only
*3 For Spanish voice guidance only

Turning on the answering system remotely

1 Dial your phone number from a touch-tone phone.

2 Let the phone ring 15 times.
- A long beep is heard.

3 Enter your remote access code within 10 seconds after the long beep.
- The greeting message is played back.
- You can either hang up, or enter your remote access code again and begin remote operation (page 45).

TGD83x(en)_1216_ver023.pdf 46 2020/12/16 14:04:17

Answering system settings

Call screening

While a caller is leaving a message, you can listen to the call through the unit's speaker.
To adjust the speaker volume, press 【▲】 or 【▼】 repeatedly.
You can answer the call by pressing 【 】 on the handset.
Call screening can be set for each unit. The default setting is "On".

1 【MENU】#310
2 【▲▼】: Select the desired setting. → 【SAVE】 → 【OFF】

Number of rings before the unit answers a call

You can change the number of times the phone rings "Ring count" before the unit answers calls. You can select 2 to 7 rings, or "Toll saver".
The default setting is "4 rings".
"Toll saver": The unit's answering system answers at the end of the 2nd ring when new messages have been recorded, or at the end of the 5th ring when there are no new messages. If you call your phone from outside to listen to new messages (page 46), you know that there are no new messages when the phone rings for the 3rd time. You can then hang up without being charged for the call.

1 【MENU】#211
2 【▲▼】: Select the desired setting. → 【SAVE】 → 【OFF】

Caller's recording time

You can change the maximum message recording time allowed for each caller. The default setting is "3 min".

1 【MENU】#305
2 【▲▼】: Select the desired setting. → 【SAVE】 → 【OFF】

Selecting "Greeting only"

You can select "Greeting only" which sets the unit to announce a greeting message to callers but not record messages.
Select "Greeting only" in step 2 on "Caller's recording time", page 47.

Note:

- When you select "Greeting only":
  - If you do not record your own message, the unit will play the pre-recorded greeting-only message asking callers to call again later.
  - If you use your own message, record the greeting-only message asking callers to call again later (page 42).

TGD83x(en)_1216_ver023.pdf 47 2020/12/16 14:04:17

Voicemail service

In addition to your unit's answering system you may also have voicemail service from your phone service provider. Voicemail is an answering service that may be offered by your phone service provider. This service can also record calls when you are unavailable to answer the phone or when your line is busy. Messages are recorded on the phone company system and not on the unit's answering system.

- To use the voicemail service rather than the unit's answering system, turn off the answering system (page 42).

If you have unit's answering system set to on and also the voicemail enabled, the system with least amount of rings will record the message first.

Example:

If the unit's answering system is set to 4 rings (page 47) and the voicemail answering system provided by your phone company is set to 6 rings (call your service provider), the unit's answering system will record the incoming call first.

Storing the voicemail (VM) access number

In order to listen to your voicemail messages, you must dial your phone service provider's voicemail access number. Once you have stored your voicemail access number, you can dial it automatically (page 48).

1 【MENU】#331

2 Enter your access number (24 digits max.). → 【SAVE】 → 【OFF】

Note:

- When storing your voicemail access number and your mailbox password, press 【▲】 (Pause) to add pauses (page 16) between the access number and the password as necessary. Contact your phone service provider for the required pause time.

Example:

1-222-333-4444	PPPP	8888
VM access number	Pauses	Password

To erase the voicemail access number

1 【MENU】#331

2 Press and hold 【CLEAR】 until all digits are erased. → 【SAVE】 → 【OFF】

Voicemail (VM) tone detection

Your phone service provider sends special signals (sometimes called "voicemail tones" or "stutter tones") to the unit to let you know you have new voicemail messages. If you hear a series of dial tones followed by a continuous dial tone after you press 【 】 on the handset, you have new voicemail messages. Soon after you hang up a call or after the phone stops ringing, your unit checks the phone line to see if new voicemail messages have been recorded.

Turn this feature off when:

– You do not subscribe to voicemail service.
– Your phone service provider does not send voicemail tones.
– Your phone is connected to a PBX.

If you are not sure which setting is required, contact your phone service provider.

Turning VM tone detection on/off

The default setting is "On".

1 【MENU】#332

2 【▲▼】: Select the desired setting. → 【SAVE】 → 【OFF】

Listening to voicemail messages

When new messages have been recorded, "Voicemail msg. via phone co." is displayed if message indication service is available.

1 【MENU】#330
- The speakerphone turns on.

TGD83x(en)_1216_ver023.pdf 48 2020/12/16 14:04:17

2 Follow the pre-recorded instructions.

3 When finished, hang up.

Note:

- You can also use the 【ACCESS】 soft key, if displayed, to play new voicemail messages.
- If the handset still indicates there are new messages even after you have listened to all new messages, turn it off by pressing and holding # until the handset beeps.

Wall mounting

Note:

- Make sure that the wall and the fixing method are strong enough to support the weight of the unit.

Base unit

1 Lead the AC adaptor cord and telephone line cord through the hole in the wall mounting adaptor in the direction of the arrow.

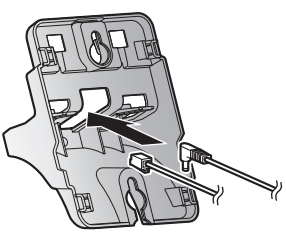

2 Tuck the telephone line cord inside the wall mounting adaptor (❶). Connect the AC adaptor cord and telephone line cord (❷).
Ⓐ AC adaptor cord

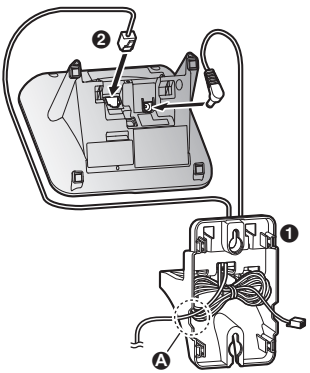

3 Insert the hooks on the wall mounting adaptor into holes (Ⓐ) and (Ⓑ) on the base unit.

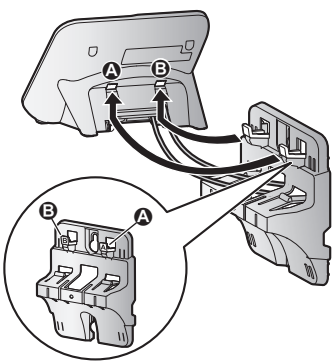

TGD83x(en)_1216_ver023.pdf 49 2020/12/16 14:04:17

4 Adjust the adaptor to hold the base unit, then push it in the direction of the arrow until it clicks into place.

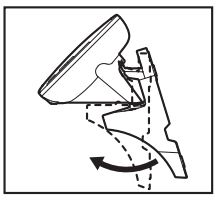

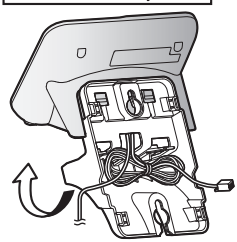

5 Mount the unit on a wall then slide down to secure in place.

Ⓐ AC adaptor cord

- This product is compliant with the following wall phone plate sizes (2 types).
  Ⓑ 83 mm (3 1/4 inches)
  Ⓒ 102 mm (4 inches)
  Fit the slots of the unit onto the corresponding wall phone plate tabs for (Ⓓ) and (Ⓔ) respectively.

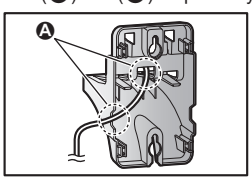

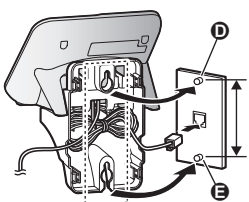

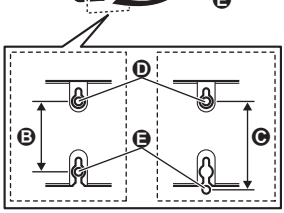

TGD83x(en)_1216_ver023.pdf 50 2020/12/16 14:04:18

To remove the wall mounting adaptor

While pushing down the release levers (❶), remove the adaptor (❷).

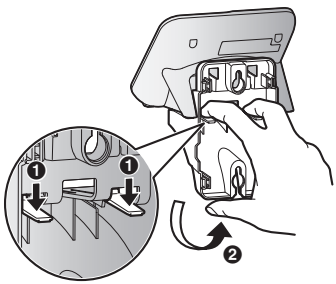

Charger

Drive the screws (Ⓐ) (not supplied) into the wall.

Ⓑ 27.2 mm (1 1/16 inches)

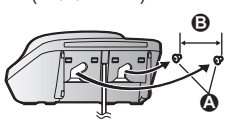

TGD83x(en)_1216_ver023.pdf 51 2020/12/16 14:04:18

Error messages

Display message	Cause/solution
Ask phone company for VM access #	● You have not stored the voicemail access number. Store the number (page 48).
Main unit no power or **No link. Re-connect base AC adaptor.**	● Confirm the base unit's AC adaptor is connected to the unit and the power outlet correctly. ● The handset has lost communication with the base unit. Move closer to the base unit and try again. ● Unplug the base unit's AC adaptor to reset the unit. Reconnect the adaptor and try again. ● The handset's registration may have been canceled. Re-register the handset (page 39).
Busy	● The called unit is in use. ● Other units are in use and the system is busy. Try again later. ● The handset you are using is too far from the base unit. Move closer and try again. ● The automated call block function is in operation. Try again later. ● One of the units is screening for telemarketing call. Try again later. ● One of the units is recording a conversation with outside caller. Try again later.
Check tel line	● The supplied telephone line cord has not been connected yet or not connected properly. Check the connections (page 10).
Checking	● The automated call block function is in operation. Try again later.
Error!!	● Recording was too short. Try again.
Memory full	● The recording memory is full. Erase unwanted recordings (page 43).
Invalid	● There is no handset registered to the base unit matching the handset number you entered. ● The handset is not registered to the base unit. Register the handset (page 39).
Requires subscription to Caller ID.	● You must subscribe to a Caller ID service. Once you receive caller information after subscribing to a Caller ID service, this message will not be displayed.
Use rechargeable battery.	● A wrong type of battery such as alkaline or manganese was inserted. Use only the rechargeable Ni-MH batteries noted on page 4, 7.

TGD83x(en)_1216_ver023.pdf 52 2020/12/16 14:04:18

Troubleshooting

If you still have difficulties after following the instructions in this section, disconnect the base unit's AC adaptor, then reconnect the base unit's AC adaptor. Remove the batteries from the handset, and then insert them into the handset again.

General use

Problem	Cause/solution
The handset does not turn on even after installing charged batteries.	● Place the handset on the base unit or charger to turn on the handset.
The unit does not work.	● Make sure the batteries are installed correctly (page 10). ● Fully charge the batteries (page 11). ● Check the connections (page 10). ● Unplug the base unit's AC adaptor to reset the unit. Reconnect the adaptor and try again. ● The handset has not been registered to the base unit. Register the handset (page 39).
I cannot hear a dial tone.	● The base unit's AC adaptor or telephone line cord is not connected. Check the connections. ● Disconnect the base unit from the telephone line and connect the line to a known working telephone. If the working telephone operates properly, contact our service personnel to have the unit repaired. If the working telephone does not operate properly, contact your phone service provider.
The base unit beeps.	● New messages have been recorded. Listen to the new messages (page 43).
Error sound is heard when I press some keys on base unit.	● Automated call block is being screened. Try again later.
The unit does not emit the specified number of rings.	● The number of rings decreases by 1 from the specified number of rings in below situations: – the first ring is turned off ("**No**") (page 22). – answer by voice command is set to "**On**" (page 20).

Menu list

Problem	Cause/solution
The display is in a language I cannot read.	● Change the display language (page 14).
I cannot register a handset to a base unit.	● The maximum number of handsets (6) is already registered to the base unit. Cancel unused handset registrations from the base unit (page 39).

TGD83x(en)_1216_ver023.pdf 53 2020/12/16 14:04:18

Battery recharge

Problem	Cause/solution
The handset beeps and/or flashes.	● Battery charge is low. Fully charge the batteries (page 11).
I fully charged the batteries, but – still flashes, – is displayed, or – the operating time seems to be shorter.	● Clean the battery ends (⊕, ⊖) and the charge contacts with a dry cloth and charge again. ● It is time to replace the batteries (page 10).

Making/answering calls, intercom

Problem	Cause/solution
is displayed.	● The handset is too far from the base unit. Move closer. ● The base unit's AC adaptor is not properly connected. Reconnect AC adaptor to the base unit. ● The handset is not registered to the base unit. Register it (page 39).
Noise is heard, sound cuts in and out.	● You are using the handset or base unit in an area with high electrical interference. Re-position the base unit and use the handset away from sources of interference. ● Move closer to the base unit. ● If you use a DSL/ADSL service, we recommend connecting a DSL/ADSL filter between the base unit and the telephone line jack. Contact your DSL/ADSL provider for details.
The handset or base unit does not ring.	● The ringer volume is turned off. Adjust the ringer volume (page 16, 32). ● Silent mode is turned on. Turn it off (page 37). ● The ringer volume is turned off by pressing and holding 0 ( ). Press and hold 0 ( ) again to turn it on (page 17).
I cannot make a call.	● The dialing mode may be set incorrectly. Change the setting (page 15).
I cannot answer an incoming call using voice commands.	● The answer by voice command feature is turned off. To turn it on, see page 20. ● Baby monitor is set to "On". Turn off the baby monitor feature (page 38).
The unit answers an incoming call on its own.	● This situation might happen due to a false detection of ambient noise (dog barking, TV sound, etc.). Move the unit further away from the noise sources. ● If you are using other telephone that has Talking Caller ID feature turned on, it may also trigger false detection. Turn the Talking Caller ID feature off on the other telephone. ● To minimize false detection, decrease the sensitivity level of the answer by voice command (page 20, 34).

TGD83x(en)_1216_ver023.pdf 54 2020/12/16 14:04:18

Problem	Cause/solution
I cannot make long distance calls.	● Make sure that you have long distance service.
I cannot use voice paging.	● You cannot use voice paging if other units are in use.

Call block

Problem	Cause/solution
The dedicated key for Telemarketing call block is not displayed.	● While on charger, the **[TELE.BLK.]** key is not available. Lift the handset from the charger. ● If Auto talk feature is set to on, the call is answered automatically when the handset is lifted from the charger during an incoming call. Turn off the auto talk feature (page 34).

Caller ID/Talking Caller ID

Problem	Cause/solution
Caller information is not displayed.	● You must subscribe to Caller ID service. Contact your phone service provider for details. ● If your unit is connected to any additional telephone equipment such as a Caller ID box or cordless telephone line jack, plug the unit directly into the wall jack. ● If you use a DSL/ADSL service, we recommend connecting a DSL/ADSL filter between the base unit and the telephone line jack. Contact your DSL/ADSL provider for details. ● The name display service may not be available in some areas. Contact your phone service provider for details. ● Other telephone equipment may be interfering with this unit. Disconnect the other equipment and try again.
Caller information is displayed or announced late.	● Depending on your phone service provider, the unit may display or announce the caller's information at the 2nd ring or later. ● Move closer to the base unit.
Caller information is not announced.	● The ringer volume is turned off. Adjust the ringer volume (page 32). ● The Talking Caller ID feature is turned off. Turn it on (page 32). ● The number of rings for the answering system is set to "**2 rings**" or "**Toll saver**". Select a different setting (page 47).
The caller list/incoming phone numbers are not edited automatically.	● The Caller ID number auto edit feature is turned off. Turn it on and try again (page 34). ● You need to call back the edited number to activate Caller ID number auto edit.

TGD83x(en)_1216_ver023.pdf 55 2020/12/16 14:04:18

Problem	Cause/solution
I cannot dial the phone number edited in the caller list.	● The phone number you dialed might have been edited incorrectly (for example, the long distance “1” or the area code is missing). Edit the phone number with another pattern (page 41).
Time on the unit has shifted.	● Incorrect time information from incoming Caller ID changes the time. Set the time adjustment to **“Manual”** (off) (page 32).
The 2nd caller’s information is not displayed during an outside call.	● In order to use Caller ID, call waiting, or Call Waiting Caller ID (CWID), you must first contact your phone service provider and subscribe to the desired service. After subscribing, you may need to contact your phone service provider again to activate this specific service, even if you already subscribed to both Caller ID and Call Waiting with Caller ID services (CWID).

Answering system

Problem	Cause/solution
The unit does not record new messages.	● The answering system is turned off. Turn it on (page 42). ● The message memory is full. Erase unnecessary messages (page 43, 44). ● The recording time is set to **“Greeting only”**. Change the setting (page 47). ● Your phone service provider’s voicemail service may be answering your calls before the unit’s answering system can answer your calls. Change the unit’s number of rings setting (page 47) to a lower value, or contact your phone service provider. ● The answering system will not answer incoming calls while the other devices such as handsets are engaged in a call.
I cannot operate the answering system remotely.	● The remote access code is not set. Set the remote access code (page 46). ● You are entering the wrong remote access code. If you have forgotten your remote access code, enter the remote access code setting to check your current code (page 46). ● The answering system is turned off. Turn it on (page 46).

TGD83x(en)_1216_ver023.pdf 56 2020/12/16 14:04:18

Voicemail

Problem	Cause/solution
"**Voicemail msg. via phone co.**" is shown on the handset display. How do I remove this message from the display?	● This notification is displayed when your phone service provider's voicemail service (not the unit's answering system) has recorded a message for you. Typically you can remove this notification from the display by listening to the message. To listen to the message, dial the voicemail number provided by your phone service provider (for most cases, this will be your own phone number), and follow the voice instructions. Depending on your phone service provider, you may need to remove all messages from your voice mailbox to remove the notification. You can also remove this notification by pressing and holding # until the unit beeps.

Liquid damage

Problem	Cause/solution
Liquid or other form of moisture has entered the handset/base unit.	● Disconnect the AC adaptor and telephone line cord from the base unit. Remove the batteries from the handset and leave to dry for at least 3 days. After the handset/base unit are completely dry, reconnect the AC adaptor and telephone line cord. Insert the batteries and charge fully before use. If the unit does not work properly, contact an authorized service center.

Caution:

- To avoid permanent damage, do not use a microwave oven to speed up the drying process.

TGD83x(en)_1216_ver023.pdf 57 2020/12/16 14:04:18

FCC and other information

This equipment complies with Part 68 of the FCC rules and the requirements adopted by the ACTA. On the bottom of this equipment is a label that contains, among other information, a product identifier in the format US:ACJ----------.
If requested, this number must be provided to the telephone company.

- Registration No.....(found on the bottom of the unit)
- Ringer Equivalence No. (REN).....0.1A

A plug and jack used to connect this equipment to the premises wiring and telephone network must comply with the applicable FCC Part 68 rules and requirements adopted by the ACTA. A compliant telephone cord and modular plug is provided with the product. It is designed to be connected to a compatible modular jack that is also compliant.

The REN is used to determine the number of devices that may be connected to a telephone line. Excessive RENs on a telephone line may result in the devices not ringing in response to an incoming call. In most but not all areas, the sum of RENs should not exceed five (5.0). To be certain of the number of devices that may be connected to a line, as determined by the total RENs, contact the local telephone company. For products approved after July 23, 2001, the REN for the product is part of the product identifier that has the format US:AAAEQ##TXXXX. The digits represented by ## are the REN without a decimal point (e.g., 03 is a REN of 0.3).

If this equipment causes harm to the telephone network, the telephone company will notify you in advance that temporary discontinuance of service may be required. But if advance notice isn't practical, the telephone company will notify the customer as soon as possible. Also, you will be advised of your right to file a complaint with the FCC if you believe it is necessary.

The telephone company may make changes in its facilities, equipment, operations or procedures that could affect the operation of the equipment. If this happens the telephone company will provide advance notice in order for you to make necessary modifications to maintain uninterrupted service.

If trouble is experienced with this equipment, for repair or warranty information, please contact a Factory Service Center or other Authorized Servicer. If the equipment is causing harm to the telephone network, the telephone company may request that you disconnect the equipment until the problem is resolved.

Connection to party line service is subject to state tariffs. Contact the state public utility commission, public service commission or corporation commission for information.

If your home has specially wired alarm equipment connected to the telephone line, ensure the installation of this equipment does not disable your alarm equipment. If you have questions about what will disable alarm equipment, consult your telephone company or a qualified installer.

This equipment is hearing aid compatible as defined by the FCC in 47 CFR Section 68.316.

When you hold the phone to your ear, noise might be heard in your Hearing Aid. Some Hearing Aids are not adequately shielded from external RF (radio frequency) energy. If noise occurs, use an optional headset accessory or the speakerphone option (if applicable) when using this phone. Consult with your audiologist or Hearing Aid

TGD83x(en)_1216_ver023.pdf 58 2020/12/16 14:04:18

manufacturer about the availability of Hearing Aids which provide adequate shielding to RF energy commonly emitted by digital devices.

WHEN PROGRAMMING EMERGENCY NUMBERS AND(OR) MAKING TEST CALLS TO EMERGENCY NUMBERS:
1) Remain on the line and briefly explain to the dispatcher the reason for the call.
2) Perform such activities in the off-peak hours, such as early morning or late evenings.

This device complies with Part 15 of the FCC Rules. Operation is subject to the following two conditions:
(1) This device may not cause harmful interference, and (2) this device must accept any interference received, including interference that may cause undesired operation.
Privacy of communications may not be ensured when using this phone.

CAUTION:
Any changes or modifications not expressly approved by the party responsible for compliance could void the user's authority to operate this device.

NOTE:
This equipment has been tested and found to comply with the limits for a Class B digital device, pursuant to Part 15 of the FCC Rules. These limits are designed to provide reasonable protection against harmful interference in a residential installation. This equipment generates, uses, and can radiate radio frequency energy and, if not installed and used in accordance with the instructions, may cause harmful interference to radio communications. However, there is no guarantee that interference will not occur in a particular installation. If this equipment does cause harmful interference to radio or television reception, which can be determined by turning the equipment off and on, the user is encouraged to try to correct the interference by one or more of the following measures:
– Reorient or relocate the receiving antenna.
– Increase the separation between the equipment and receiver.
– Connect the equipment into an outlet on a circuit different from that to which the receiver is connected.
– Consult the dealer or an experienced radio/TV technician for help.

Some cordless telephones operate at frequencies that may cause interference to nearby TVs and VCRs. To minimize or prevent such interference, the base of the cordless telephone should not be placed near or on top of a TV or VCR. If interference is experienced, move the cordless telephone further away from the TV or VCR. This will often reduce or eliminate interference.

FCC RF Exposure Warning:
- This product complies with FCC radiation exposure limits set forth for an uncontrolled environment.
- To comply with FCC RF exposure requirements, the base unit must be installed and operated 20 cm (8 inches) or more between the product and all person's body.
- This product may not be collocated or operated in conjunction with any other antenna or transmitter.
- For body-worn operation, the handset must be used only with a non-metallic accessory. Use of other accessories may not ensure compliance with FCC RF exposure requirements.

Notice:
- FCC ID can be found inside the battery compartment or on the bottom of the units.

TGD83x(en)_1216_ver023.pdf 59 2020/12/16 14:04:18

Compliance with TIA-1083 standard:
Telephone handsets identified with this logo have reduced noise and interference when used with T-Coil equipped hearing aids and cochlear implants.

TGD83x(en)_1216_ver023.pdf 60 2020/12/16 14:04:18

Guía Rápida Española

Conexiones

Unidad base

① Conecte el adaptador de corriente alterna a la unidad presionándolo firmemente.
② Conecte el adaptador de corriente alterna a la toma de corriente.
③ Conecte el cable de la línea telefónica a la unidad, y después a la toma telefónica de una sola línea (RJ11C) hasta que escuche un clic.
④ Se requiere un filtro DSL/ADSL (no incluido) si tiene este tipo de servicio.

Nota:

- Use solo el adaptador de corriente alterna Panasonic PNLV226 que se suministra.

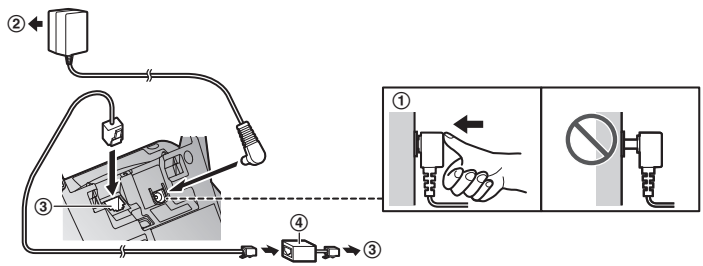

Cargador

① Conecte el adaptador de corriente alterna a la toma de corriente.

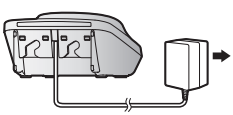

TGD83x(en)_1216_ver023.pdf 61 2020/12/16 14:04:18

Instalación y carga y extracción de la batería

Cargue aproximadamente durante 7 horas.

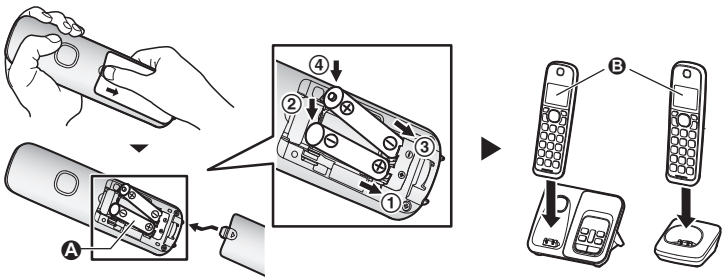

Nota:

- UTILICE SOLO baterías recargables de Ni-MH tamaño AAA (R03) (Ⓐ).
- NO utilice baterías alcalinas, de manganeso ni de Ni-Cd.
- Confirme que las polaridades estén correctas (⊕, ⊖).
- Cambie el idioma de la pantalla.
- Confirme que aparezca "**Cargando**" (Ⓑ).

Extracción la batería

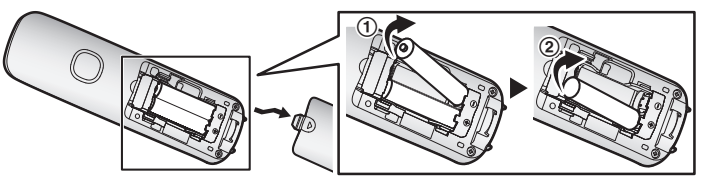

TGD83x(en)_1216_ver023.pdf 62 2020/12/16 14:04:18

Sugerencias de operación

Teclas de función
Al oprimir una tecla de función, puede seleccionar la función que aparece directamente encima de ella en la pantalla. Preste atención a la pantalla para ver qué funciones están asignadas a las teclas de función durante la operación.

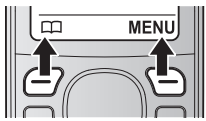

Tecla navegadora
- 【▲】, 【▼】, 【◄】 o 【►】: Navegue por diversas listas y elementos.
- VOL. (Volumen: 【▲】 o 【▼】): Ajuste el volumen del receptor o el altavoz mientras habla.
- 【◄】 📖: Vea la entrada del directorio telefónico.
- 【►】 REDIAL (Remarcación): Vea la lista de remarcación.
- 【▼】 CID (Identificador de llamadas): Vea la lista de personas que llamaron.

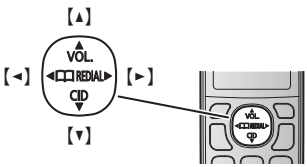

Cambio de idiomas (Auricular) (predeterminado: "English")

Cuando instale las baterías por primera vez, es posible que aparezca "**Set date/time Press SELECT**". Oprima 【**OFF**】 para salir.

Idioma de la pantalla
【**MENU**】#110 → 【▲▼】: "**Español**" → 【**GUARDAR**】 → 【**OFF**】

Idioma de anuncio de voz
【**MENU**】#112 → 【▲▼】: "**Español**" → 【**GUARDAR**】 → 【**OFF**】

Fecha y hora (Auricular)

1 【**MENU**】#101
2 Introduzca el día, mes y año actuales. → 【**OK**】
3 Introduzca la hora y minuto actuales (formato de reloj de 24 horas).
4 【**GUARDAR**】 → 【**OFF**】

Cómo grabar el mensaje de saludo del contestador de llamadas (Auricular)

Puede grabar su propio mensaje de saludo en lugar de usar uno pregrabado.
1 【**MENU**】#302 → 【▲▼】: "**Sí**" → 【**SELEC.**】
2 Después de que suene un pitido, hable con claridad en el micrófono a una distancia aproximada de 20 cm (8 pulgadas) (máx. de 2 minutos).
3 Oprima 【**PARAR**】 para dejar de grabar. → 【**OFF**】

TGD83x(en)_1216_ver023.pdf 63 2020/12/16 14:04:19

Operaciones básicas

Cómo hacer y contestar llamadas (Auricular)	
Para hacer llamadas	Marque el número telefónico. → 【📞】/【🔊】
Para contestar llamadas	【📞】/【🔊】
Para colgar	【**OFF**】
Para ajustar el volumen del receptor o del altavoz	Oprima 【▲】 o 【▼】 repetidamente mientras habla.
Cómo hacer una llamada usando la lista de remarcación	【►】 REDIAL → 【⇕】: Seleccione la entrada deseada. → 【📞】/【🔊】
Para ajustar el volumen del timbre	Oprima 【▲】 o 【▼】 repetidamente para seleccionar el volumen deseado mientras timbra.
Directorio telefónico (Auricular)	
Para añadir entradas	**1** 【◄】📖 → 【**MENU**】 **2** 【⇕】: "**Agregar ent. nueva**" → 【**SELEC.**】 **3** Introduzca el nombre de la persona (máx. 16 caracteres). → 【**OK**】 **4** Introduzca el número telefónico de la persona (máx. 24 dígitos). → 【**OK**】 **5** 【⇕】: Seleccione el grupo deseado. → 【**SELEC.**】 2 veces → 【**OFF**】 ● En el paso 3, puede cambiar el idioma de introducción de caracteres. # → 【⇕】: Seleccione el idioma deseado. → 【**OK**】
Para hacer llamadas	【◄】📖 → 【⇕】: Seleccione la entrada deseada. → 【📞】
Sistema contestador de llamadas (Unidad base)	
Contestador encendido/ apagado	Oprima 【**ANSWER ON/OFF**】 para encender y apagar el contestador de llamadas.
Para escuchar mensajes	【▶■】 (PLAY)
Sistema contestador de llamadas (Auricular)	
Para escuchar mensajes	**Para escuchar mensajes nuevos:** 【**REPROD.**】 o 【**MENU**】#323 **Para escuchar todos los mensajes:** 【**MENU**】#324

TGD83x(en)_1216_ver023.pdf 64 2020/12/16 14:04:19

Preguntas frecuentes

Pregunta	Causa y solución
¿Por qué aparece ⚠?	● El auricular está demasiado lejos de la unidad base. Acérquelo. ● El adaptador para corriente de la unidad base no está conectado correctamente. Conecte de nuevo el adaptador para corriente a la unidad base. ● El auricular no está registrado en la unidad base. Regístrelo. **1** **Auricular:** 【**MENU**】#130 **2** **Unidad base:** Oprima y mantenga oprimido 【**LOCATOR**】 durante aproximadamente 5 segundos. **3** **Auricular:** Oprima 【**OK**】, y después espere hasta que suene un pitido largo.
¿Cómo se incrementa el nivel de volumen del auricular?	● Oprima la tecla de volumen 【▲】 repetidamente mientras habla.
¿Por qué hay ruido o se corta la conversación?	● Trate de reubicar la unidad base de forma que se minimice la distancia al auricular. ● Si ocurre el mismo problema aunque el auricular se encuentre enseguida de la unidad base, visite: http://shop.panasonic.com/support
¿Es posible añadir otro auricular accesorio a mi unidad base?	● Sí, puede añadir hasta 6 auriculares (incluyendo los que se venden con su unidad base) a una sola unidad base. ● Para adquirir auriculares accesorios adicionales (KX-TGDA83/ KX-TGDA86), visite: http://shop.panasonic.com/support Los usuarios TTY (usuarios con impedimentos auditivos o del habla) pueden llamar al 1-877-833-8855.
¿Es posible mantener cargando las baterías todo el tiempo?	● Puede dejar el auricular en la unidad base o el cargador en cualquier momento. Esto no daña las baterías.
¿Cómo se contestan las llamadas en espera (2a llamada)?	● Oprima 【**CALL WAIT**】 cuando escuche el tono de llamada en espera.

TGD83x(en)_1216_ver023.pdf 65 2020/12/16 14:04:19

Customer services

Shop Accessories!

for all your Panasonic gear

Go to

http://shop.panasonic.com/support

Get everything you need to get the most out of your Panasonic products

Accessories & Parts for your Camera, Phone, A/V products, TV, Computers & Networking, Personal Care, Home Appliances, Headphones, Batteries, Backup Chargers & more…

Customer Services Directory

For Product Information, Operating Assistance, Parts, Owner's Manuals, Dealer and Service info go to http://shop.panasonic.com/support

For the hearing or speech impaired TTY: 1- 877-833-8855

As of June 2015

TGD83x(en)_1216_ver023.pdf 66 2020/12/16 14:04:19

Limited Warranty (ONLY FOR U.S.A.)

Panasonic Products Limited Warranty

Limited Warranty Coverage (For USA Only)

If your product does not work properly because of a defect in materials or workmanship, Panasonic Corporation of North America (referred to as “the warrantor”) will, for the length of the period indicated on the chart below, which starts with the date of original purchase (“warranty period”), at its option either (a) repair your product with new or refurbished parts, (b) replace it with a new or a refurbished equivalent value product, or (c) refund your purchase price. The decision to repair, replace or refund will be made by the warrantor.

Product or Part Name	Parts	Labor
Telephone	One (1) Year	One (1) Year

During the “Labor” warranty period there will be no charge for labor. During the “Parts” warranty period, there will be no charge for parts. This Limited Warranty excludes both parts and labor for non-rechargeable batteries, antennas, and cosmetic parts (cabinet). This warranty only applies to products purchased and serviced in the United States. This warranty is extended only to the original purchaser of a new product which was not sold “as is”.

Mail-In Service--Online Repair Request

Online Repair Request

To submit a new repair request and for quick repair status visit our Web Site at http://shop.panasonic.com/support

When shipping the unit, carefully pack, include all supplied accessories listed in the Owner’s Manual, and send it prepaid, adequately insured and packed well in a carton box. When shipping Lithium Ion batteries please visit our Web Site at http://shop.panasonic.com/support as Panasonic is committed to providing the most up to date information. Include a letter detailing the complaint, a return address and provide a daytime phone number where you can be reached. A valid registered receipt is required under the Limited Warranty.

IF REPAIR IS NEEDED DURING THE WARRANTY PERIOD, THE PURCHASER WILL BE REQUIRED TO FURNISH A SALES RECEIPT/PROOF OF PURCHASE INDICATING DATE OF PURCHASE, AMOUNT PAID AND PLACE OF PURCHASE. CUSTOMER WILL BE CHARGED FOR THE REPAIR OF ANY UNIT RECEIVED WITHOUT SUCH PROOF OF PURCHASE.

TGD83x(en)_1216_ver023.pdf 67 2020/12/16 14:04:19

Limited Warranty Limits and Exclusions

This warranty ONLY COVERS failures due to defects in materials or workmanship, and DOES NOT COVER normal wear and tear or cosmetic damage. The warranty ALSO DOES NOT COVER damages which occurred in shipment, or failures which are caused by products not supplied by the warrantor, or failures which result from accidents, misuse, abuse, neglect, mishandling, misapplication, alteration, faulty installation, set-up adjustments, misadjustment of consumer controls, improper maintenance, power line surge, lightning damage, modification, introduction of sand, humidity or liquids, commercial use such as hotel, office, restaurant, or other business or rental use of the product, or service by anyone other than a Factory Service Center or other Authorized Servicer, or damage that is attributable to acts of God.

THERE ARE NO EXPRESS WARRANTIES EXCEPT AS LISTED UNDER "LIMITED WARRANTY COVERAGE".

THE WARRANTOR IS NOT LIABLE FOR INCIDENTAL OR CONSEQUENTIAL DAMAGES RESULTING FROM THE USE OF THIS PRODUCT, OR ARISING OUT OF ANY BREACH OF THIS WARRANTY.

(As examples, this excludes damages for lost time, travel to and from the servicer, loss of or damage to media or images, data or other memory or recorded content. The items listed are not exclusive, but for illustration only.)

ALL EXPRESS AND IMPLIED WARRANTIES, INCLUDING THE WARRANTY OF MERCHANTABILITY, ARE LIMITED TO THE PERIOD OF THE LIMITED WARRANTY.

Some states do not allow the exclusion or limitation of incidental or consequential damages, or limitations on how long an implied warranty lasts, so the exclusions may not apply to you. This warranty gives you specific legal rights and you may also have other rights which vary from state to state. If a problem with this product develops during or after the warranty period, you may contact your dealer or Service Center. If the problem is not handled to your satisfaction, then write to:

Panasonic Corporation of North America
Consumer Affairs Department 8th Fl.
Two Riverfront Plaza
Newark NJ 07102-5490

PARTS AND SERVICE, WHICH ARE NOT COVERED BY THIS LIMITED WARRANTY, ARE YOUR RESPONSIBILITY.

As of January 2020

TGD83x(en)_1216_ver023.pdf 68 2020/12/16 14:04:19

Index

3-way conference: *18*

A Additional handset: *39*
Alarm: *36*
Answer by voice command: *20*
Answering calls: *16*
Answering system
Call screening: *47*
Erasing messages: *43*, *44*, *46*
Greeting message: *42*
Greeting only: *47*
Listening to messages: *43*, *46*
New message alerting: *44*
Number of rings: *47*
Recording time: *47*
Remote access code: *46*
Remote operation: *45*
Ring count: *47*
Toll saver: *47*
Turning on/off: *42*
Auto intercom: *19*
Auto talk: *16*, *34*
Automated call block: *23*

B Baby monitor: *37*
Battery: *10*, *11*

C Call block: *21*
One ring for blocked call: *22*
Call share: *18*, *34*
Call waiting: *17*
Call Waiting Caller ID: *17*
Caller ID number auto edit: *34*, *41*
Caller ID service: *40*
Caller list: *40*
Caller list edit: *41*
Chain dial: *28*
CID (Caller ID): *40*
Conference calls: *18*
Control type: *13*
Customer support: *35*

D Date and time: *14*
Dialing mode: *15*
Direct command code: *30*
Display
Contrast: *34*
Language: *14*

E Eco mode: *12*
Equalizer: *18*
Error messages: *52*

F Flash: *17*, *34*

G Groups: *27*

H Handset
Deregistration: *39*
Name: *39*
Registration: *39*
Hold: *17*

I Intercom: *19*

K Key detector: *33*, *35*
Key tone: *34*

L Line mode: *34*
Low battery alert: *15*

M Making calls: *16*
Missed calls: *40*
Mute: *17*

N Noise reduction: *17*

O One ring scam alert: *25*

P Pause: *16*
Phonebook: *27*
Power failure: *11*

R Recording telephone conversations: *18*
Redialing: *16*
Ringer ID: *28*
Ringer tone: *32*
Rotary/pulse service: *17*

S Silent mode: *36*
Speed dial: *29*
SP-PHONE (Speakerphone): *16*

T Talking Caller ID: *40*
Telemarketing call block: *25*
Temporary tone dialing: *17*
Time adjustment: *32*
Transferring calls: *18*
Troubleshooting: *53*
TTY: *66*

V VM (Voicemail): *48*
Voice announcement language: *14*
Voice paging: *19*
Voicemail: *48*
Volume
Receiver: *16*
Ringer (Base unit): *16*
Ringer (Handset): *16*, *32*
Ringer for intercom call (Handset): *32*
Speaker: *16*

W Wall mounting: *49*

TGD83x(en)_1216_ver023.pdf 69 2020/12/16 14:04:19

Notes

TGD83x(en)_1216_ver023.pdf 70 2020/12/16 14:04:19

TGD83x(en)_1216_ver023.pdf 71 2020/12/16 14:04:19

IMPORTANT!

If your product is not working properly. . .

① **Reconnect AC adaptor to the base unit.**
② **Check if telephone line cord is connected.**
③ **Use rechargeable Ni-MH batteries.**
(Alkaline/Manganese/Ni-Cd batteries CANNOT be used.)
④ Read **troubleshooting** page in the **Operating Instructions**.

Visit our Web site: http://shop.panasonic.com/support
- **FAQ and troubleshooting hints are available.**

For your future reference
We recommend keeping a record of the following information to assist with any repair under warranty.

Serial No.	Date of purchase
(found on the bottom of the base unit)	
Name and address of dealer	

Attach your purchase receipt here.

Panasonic Corporation of North America
Two Riverfront Plaza, Newark, NJ 07102-5490

© Panasonic Corporation 2020

Printed in Malaysia

PNQX9140ZA

PNQX9140ZA PP1220BQ0